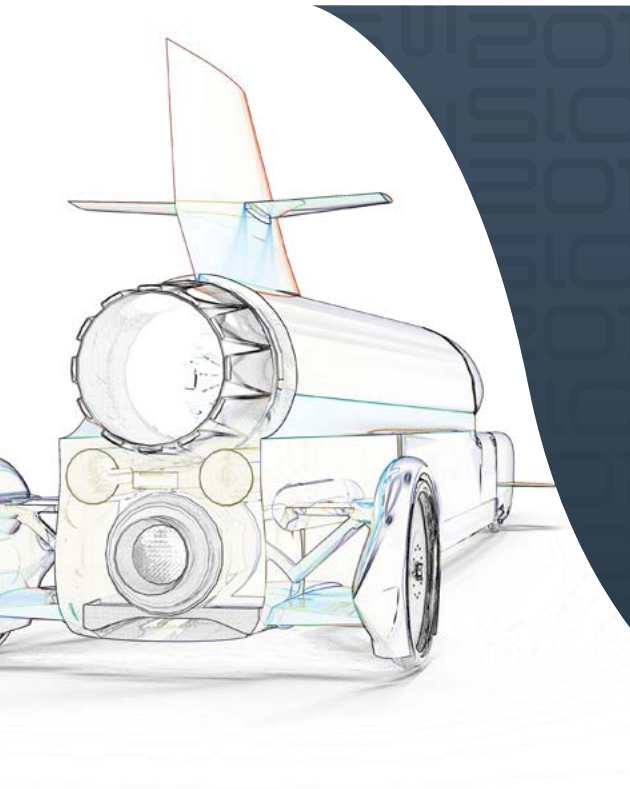

Delcam Advanced Manufacturing Solutions

FeatureCAM 2015 R3

Feature-based CAM software for mills, multi-tasking lathes and wire EDM

www.featurecam.com

Getting Started

FeatureCAM 2015 R3

Getting Started

FeatureCAM

Acknowledgements

This documentation references a number of registered trademarks and these are the property of their respective owners. For example, Microsoft and Windows are either registered trademarks or trademarks of Microsoft Corporation in the United States.

FeatureCAM Version: 2015 R3 Date: 26 March 2015 12:22

Contents

Getting started in FeatureCAM 1

Starting FeatureCAM for the first time....2
Creating a new file....4
Screen layout....5
Getting help....6

Introduction to 2.5D milling 8

Defining the Stock....8
Creating the features....9
Viewing the part....12
Simulating the toolpaths....13
Order of manufacturing operations....15
    Automatic ordering operations....16
    Manual ordering options....18
Part documentation....19
Controlling the strategies....20
Generating NC code....21
Tool mapping....22
Changing the post processor....22
Saving the NC code....23

Introduction to turning 24

Defining the stock....24
Preparatory steps....26
Defining the geometry....27
Creating the features....30
Viewing the part....35
Simulating the toolpaths....37
Order of manufacturing operations....38
Part documentation (Turning)....40
Generating NC code (Turning)....41
Changing the post processor....41
Saving the NC code....42

Introduction to turn/mill 43

Preparatory steps....44
Defining the geometry....44
Creating the features....47

Viewing the part 48
Creating three radial holes on the face 49
Engraving the face 50
Creating three slots 53
Simulating the toolpaths 54

Introduction to 3D milling 55

Defining the Stock 56
Defining the geometry 56
Creating the bottle surface 60
Viewing the part 61
Creating a surface milling feature 63
Simulating the toolpaths 66

Introduction to wire EDM 67

Defining the stock 67
Creating the profile 68
Creating a wire EDM feature 70
Simulating the wire EDM toolpath 71
Generating NC code 73
Adding a taper angle 74

Index 77

Getting started in FeatureCAM

FeatureCAM is a CAD/CAM software suite that automates machining and minimizes programming times for parts on mills, lathes, and wire EDM.

The functionality available to you depends on which components you have licensed.

FeatureCAM generates toolpaths based on the features of the part, and automatically selects appropriate tools, determines roughing and finishing passes, and calculates feeds and speeds.

This **Getting Started** guide provides step-by-step instructions that highlight some of the features of this versatile software. FeatureCAM is very easy to use, and does not require any specialist computing knowledge.

Starting FeatureCAM for the first time

1 From the **Start** menu, select **All Programs > FeatureCAM > FeatureCAM**.

You can also start the program by double-clicking the FeatureCAM icon on your desktop.

The first time you start FeatureCAM, it runs a program to create the tools and materials database.

2 Click **OK** to begin the configuration. This displays the **Tool and Material Setup** dialog.

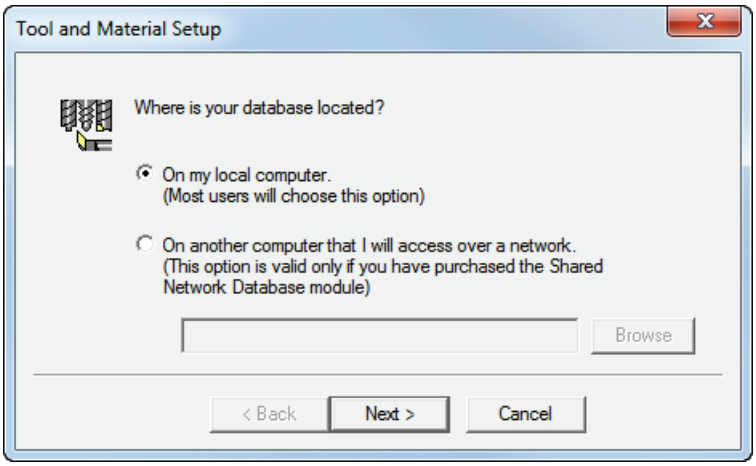

3 To create a local database, select **On my local computer**.

If you want multiple computers to share the same tool and material information:

a Select **On another computer that I will access over a network**.

b Click the **Browse** button, and use the **Database Location** dialog to select the folder where the database is located.

You need to create a database folder on your network first, and then copy an empty MDB database from the FeatureCAM CD-ROM to this location. The default database is created by MS Access, and should be accessed using the MS Jet database driver. You may use a different database type, such as MS SQL Server. For more information, refer to the online help.

*You need to have the **Shared Network Database** module to use this option.*

4 Click **Next**.

5 Choose the tools to load:

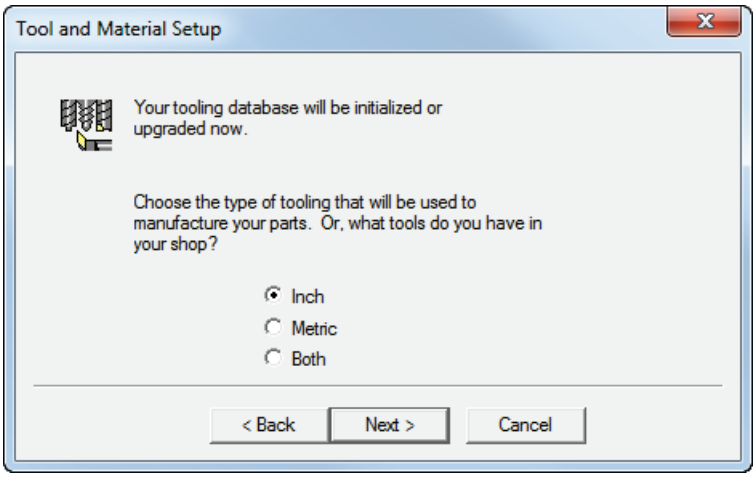

Inch - loads only the inch tools.

Metric - loads only the metric tools.

Both - loads both inch and metric tools.

6 Click **Next**.

7 If you chose to load both tool types, you are asked which tool type you use more often. Select **Inch** or **Metric**, and click **Next**.

8 Click **Finish** to initialize the database.

*The tools database specifies the set of tools used by FeatureCAM to perform manufacturing operations. For best results, use the **Tool Manager** (available from the **Manufacturing** menu) to customize the database to reflect the tools in your shop.*

Creating a new file

Starting FeatureCAM displays the **New Part Document Wizard**.

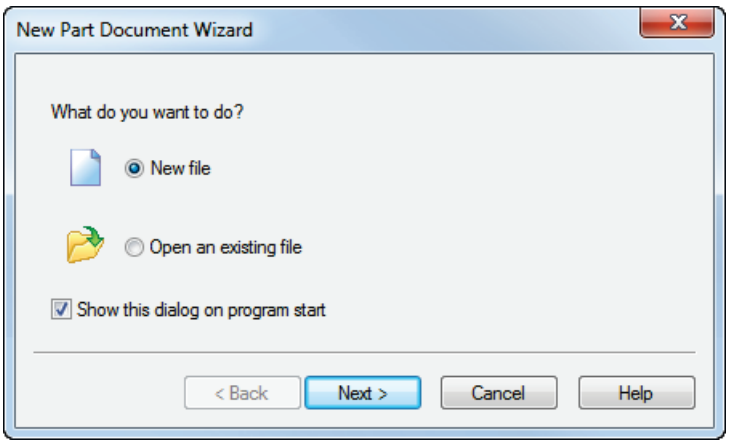

1 Select **New file** in the **New Part Document Wizard**, and click **Next.**

2 Choose a **Type** of **Milling Setup.**

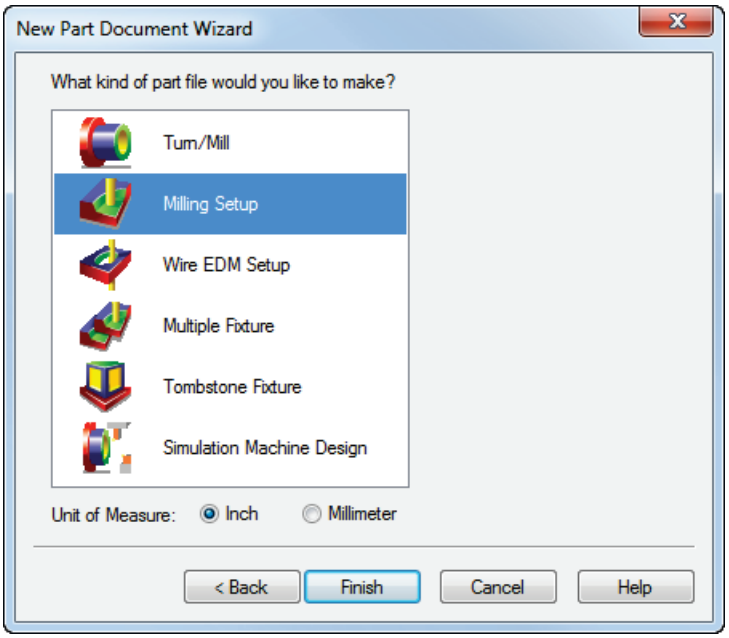

3 Select the **Unit of Measure** (**Inch** or **Millimeter**).

*You can change the default dimension units later, by selecting **Options > File Options** from the menu.*

4 Click **Finish.**

Screen layout

The FeatureCAM interface contains a number of standard Windows elements, such as toolbars, dialogs, context menus, and wizards.

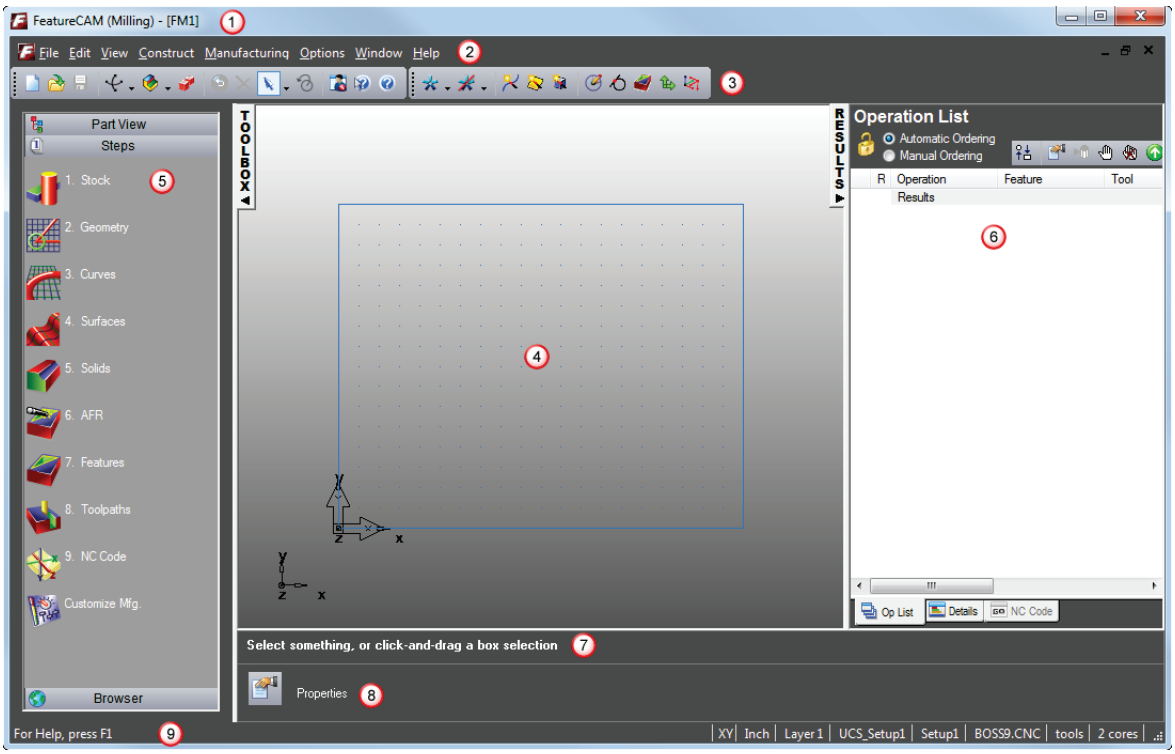

1 **Title** bar displays the type of part setup in round brackets, in this case **(Milling)**, and the name of your part file in square brackets, in this case **[FM1]**. When you have any unsaved changes in your part file, an asterisk (*) is displayed next to its name.

2 **Menu** bar provides access to a number of menus. Selecting a menu, such as **View**, opens a list of associated commands and sub-menus. Sub-menus are indicated by a small arrow to the right of the text. For example, selecting **View > Principal Views ▸** displays a list of commonly used views.

3 **Toolbars** provide quick access to the most commonly used commands in FeatureCAM.

4 The graphics window is the main working area.

5 **Toolbox** window with the **Steps** panel, **Part View** panel, and **Browser**.

The **Steps** panel contains an ordered list of steps for creating part programs. Each step is a wizard that presents a series of dialogs for each process. They are listed in the order in which you should use them during the process of creating a part program.

The **Part View** panel provides a hierarchical view of the part.

The **Browser** contains information on the latest features available in FeatureCAM, including example files that you can load straight into FeatureCAM.

⑥ **Results** window contains the automatically generated documentation including tooling lists, setup sheets, and the NC part programs. Selecting one of the tabs at the bottom of the window changes the content of this window.

⑦ **Assistance** bar displays help for the current command.

⑧ **Feature/Geometry Edit** bar lets you select and edit a feature, or enter the point locations and parameters for geometry creation.

⑨ **Status** bar shows your current drawing units, tool crib, and post processor settings, as well as your keyboard status and information about the simulation when you run one.

Getting help

FeatureCAM provides a variety of ways for you to get help. Context-sensitive help displays help for the current task. You can also refer to the numerous examples in the **Examples** folder, located in the FeatureCAM root directory. Finally, if you cannot find an answer to your question, you can visit our website or contact our technical support.

Online help

The online help documentation is your primary source for in-depth technical information about FeatureCAM. It covers all FeatureCAM modules, and is accessed from the **Help** menu, or by clicking on the toolbar.

Context-sensitive help

You can use one of the following methods to get help relevant to the current task:

- Some commands automatically display the help in the **Assistance** bar.

  Step 1: Pick point

- Hovering the mouse over a toolbar icon displays a brief description.

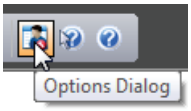

- Pressing **F1** displays the relevant help page.
- Most FeatureCAM dialogs have the **Help** button. Clicking it displays the relevant help page.
- Click the **Context Help** button on the toolbar. When the cursor has changed to a question mark (**?**), click a menu item, button or dialog for more information.

Links

You can find FeatureCAM information from the **Help** menu:

- **Help > FeatureCAM on the Web** for product news, online support, training information, discussion forum, and mailing list.
- **Help > Check for a FeatureCAM Patch** for product updates.
- **Help > FeatureCAM API Help** for documentation on the FeatureCAM API (Application Programming Interface).

Technical Support

If you have any questions related to FeatureCAM, which you cannot find an answer to in the documentation, you can contact the Delcam technical support service. Email *support@featurecam.com*, describing your problem as precisely as possible. This support is free for the first 60 days after your initial purchase and 30 days after the purchase of an upgrade.

Introduction to 2.5D milling

This example shows you how to create some simple features, generate toolpaths and output the toolpaths used to machine the part.

1. Start FeatureCAM (see page 2).
2. Create a new file (see page 4).
3. Create the stock (see page 8).
4. Create the features (see page 9).
5. Viewing the part (see page 12).
6. Simulating the toolpaths (see page 13).
7. Part documentation (see page 19).
8. Controlling the automation (see page 20).
9. Changing the post processor (see page 22).
10. Generating NC code (see page 21).
11. Tool mapping (see page 22).
12. Saving the NC code (see page 23).

Defining the Stock

The stock is the initial material from which you cut your part. When you create a new part, the **Dimensions** page of the **Stock** wizard is displayed. It enables you to determine the shape and dimensions for the stock, the stock material, part program zero, and the coordinate system for modeling.

1 On the **Dimensions** page of the **Stock** wizard:

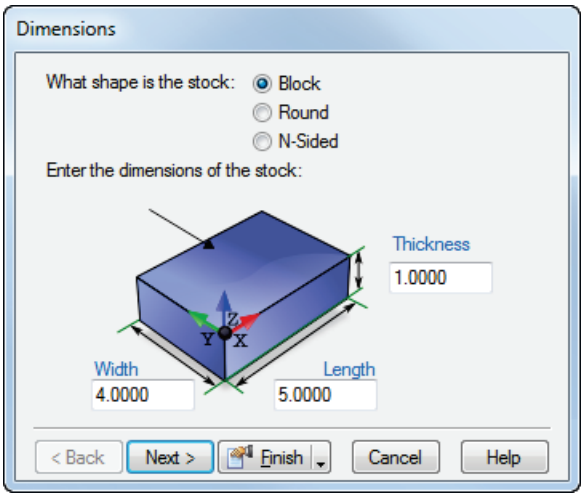

a Enter a **Thickness** of 1 (25 mm).

b Enter a **Width** of 4 (100 mm).

c Enter a **Length** of 5 (120 mm).

d Click **Finish**.

2 Click **OK** to accept the default values of the **Stock** wizard.

Creating the features

This step shows how to create Hole and Rectangular Pocket features.

English units

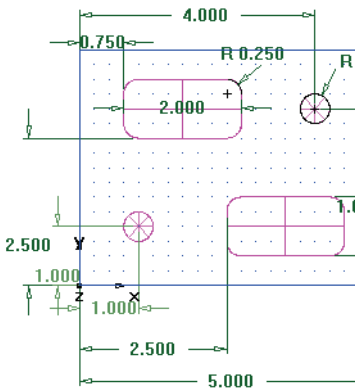

Metric units

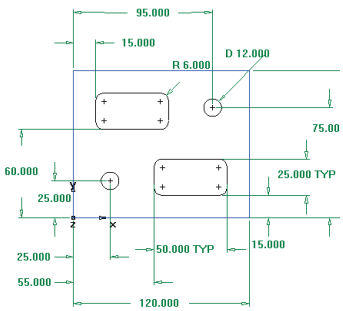

1 Create a Hole feature.

a Click the **Features**  step in the **Steps** panel.

b In the **New Feature** wizard, select **Hole** in the **From Dimensions** section, and click **Next**.

c Enter a **Diameter** of 0.5 (12 mm), and click **Next**.

d Enter a hole center location of **X** 1.0 (25 mm) and **Y** 1.0 (25 mm), and click **Next**.

This displays the **Strategies** page. This page controls the types of operations used to cut the feature. The default operations for a Hole feature are to spot drill and then drill the hole. If the Hole has a chamfer, the default is to cut the chamfer with the spot drill operation.

e Accept the default strategy settings by clicking **Next**.

The **Operations** page shows a summary of the operations to cut the feature, the automatically selected tools, and the feeds and speeds.

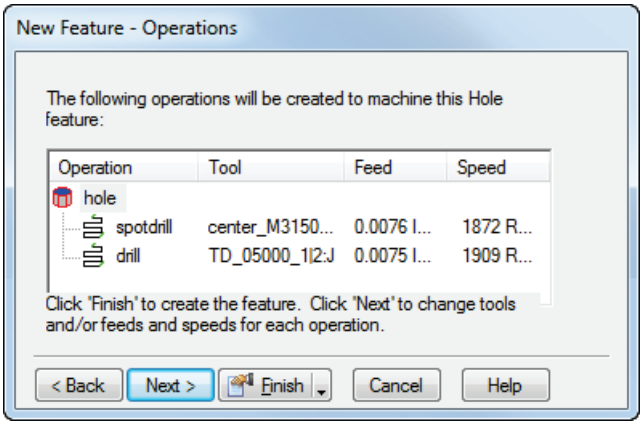

From the **Finish** menu button select the **Finish** 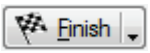

option.

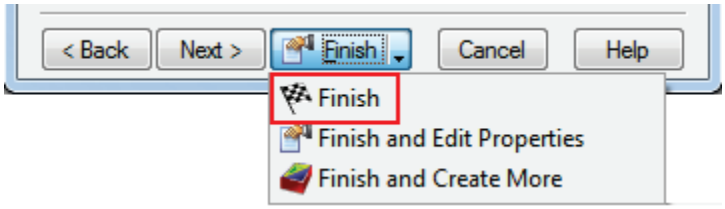

2 Create a Rectangular Pocket feature.

a Click the **Features**  step in the **Steps** panel.

b In the **New Feature** wizard, in the **From Dimensions** section, select **Rectangular Pocket**, and click **Next**.

c Accept the default dimensions by clicking **Next**.

d Enter a pocket location of **X** 0.75 (15 mm), and **Y** 2.5 (60 mm), and **Z** 0 (0 mm), and click **Next**.

The **Strategies** page shows that roughing and finishing operations are created.

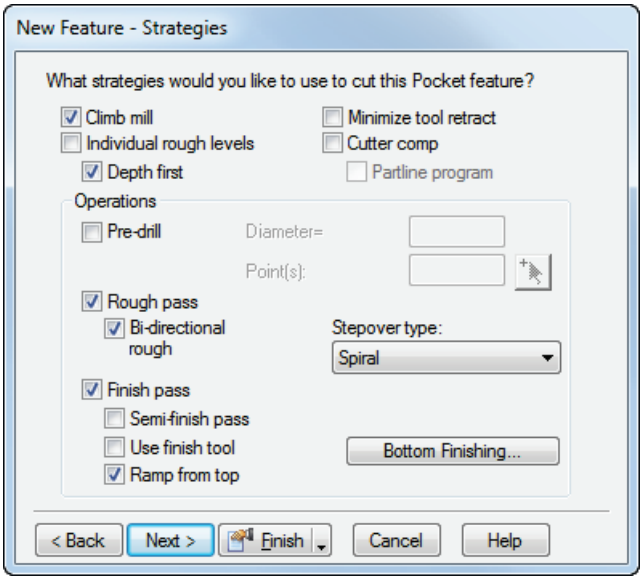

e Click the **Finish** button.

3 Use the **Features**  step to create a second Hole with a diameter of 0.5 (12 mm), located at **X**=4 (95 mm) and **Y**=3 (75 mm).

4 Use the **Features**  step to create another Rectangular Pocket the same dimensions as the first, but positioned at **X**=2.5 (55 mm), **Y**=0.5 (15 mm).

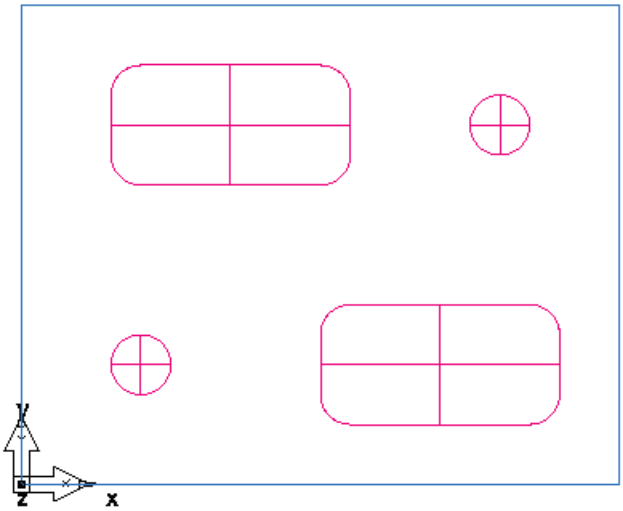

5 Select **File > Save**, and save the part as milling.fm.

Viewing the part

To look at the part in a different orientation you can select one of the standard predefined views. These options are available from the **Standard** toolbar:

1 To change the view to an isometric view, click the **Isometric** button on the **Standard** toolbar.

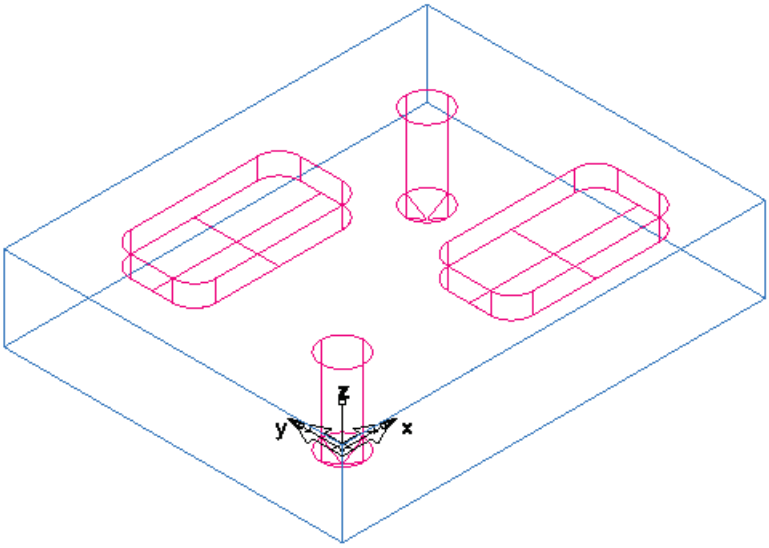

2 To change the view to a front view, from the **Principle View** menu button, click the **Front** button.

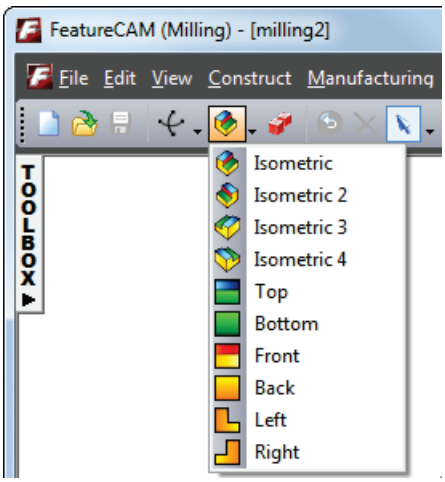

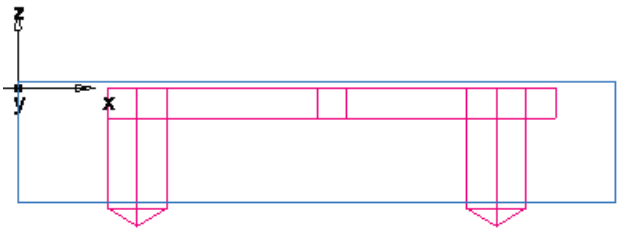

3 Click the **Isometric** button to return to the isometric view.

Simulating the toolpaths

Now you have created the features, FeatureCAM automatically:

- Selects the most appropriate tools and operations;
- Recommends machining strategies;
- Calculates speeds and feeds;
- Generates toolpaths and creates the NC code.

To view the simulated toolpath:

1 Click the **Toolpaths** step in the **Steps** panel. This displays the **Simulation** toolbar.

2 Select the **3D Simulation** option, and then click **Play** to start the simulation. If the **Automatic Ordering Options** dialog appears, click **OK** to close it. This accepts the default ordering options.

This displays a solid 3D rendering of the cutting process.

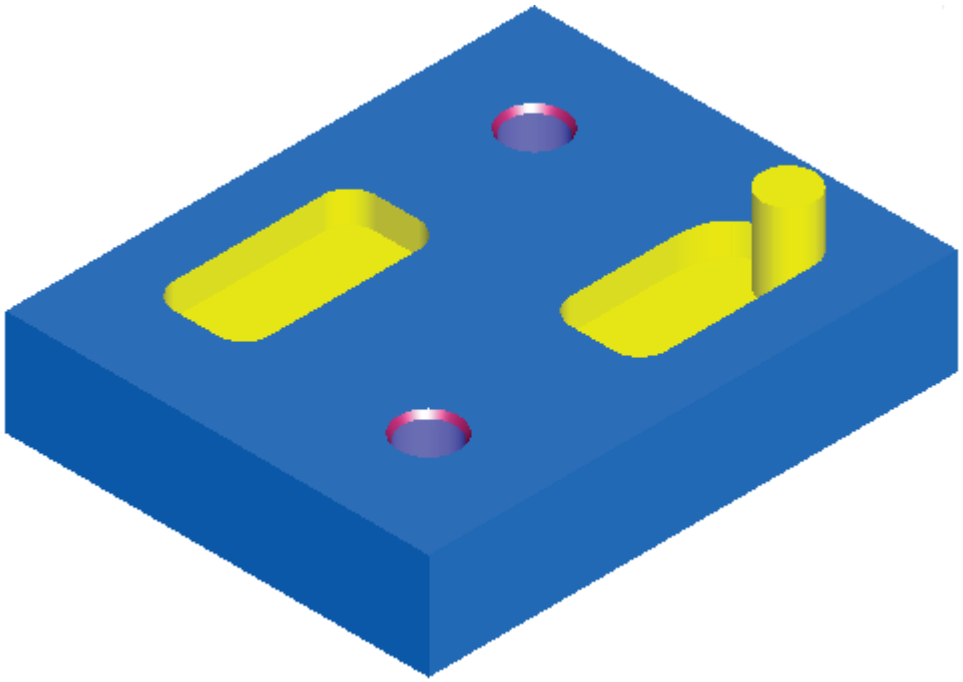

*If all tools are displayed in gray in the simulation, select **Options > Simulation > General** from the menu, and select the **Tool Colors** option, then click **OK** to close the dialog. This displays tools in different colors so you can see which features are machined by each tool.*

*Click the **Play** button on the **Simulation** toolbar to see the changes.*

3 Click the **Play to Next Operation** button. This displays the spot drill operation.

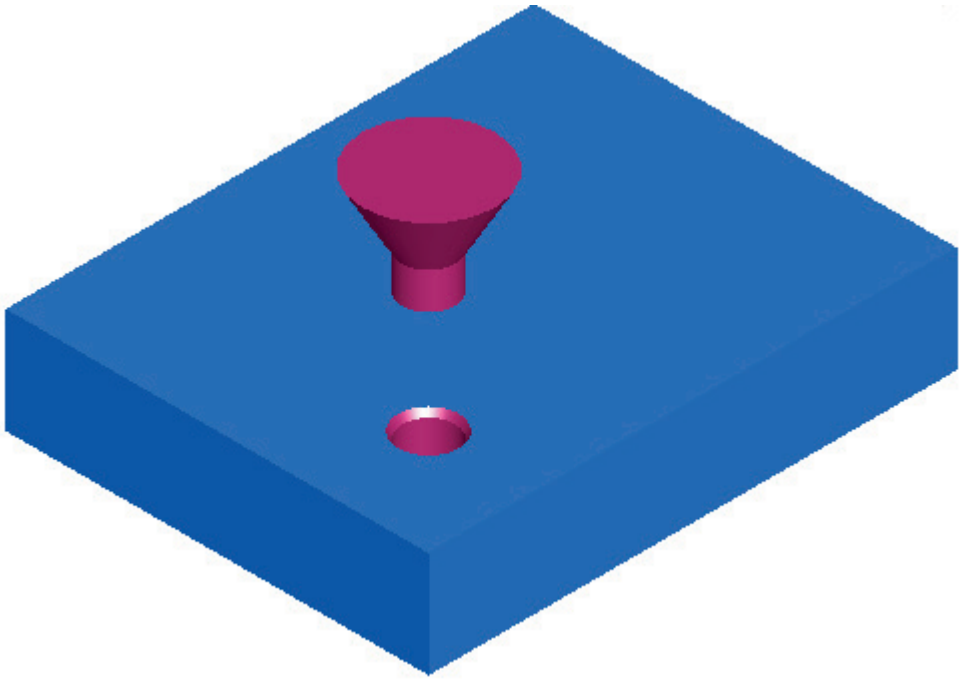

4 Repeat step 3 to view each subsequent operation until you complete the simulation.

5 Click **Eject**. This removes the **Simulation** toolbar.

Order of manufacturing operations

The **Op List** tab in the **Results** window shows all of the operations needed to machine the features. A yellow warning ⚠ sign next to an operation indicates a potential problem with that operation. In this case, if you see any warnings ignore them.

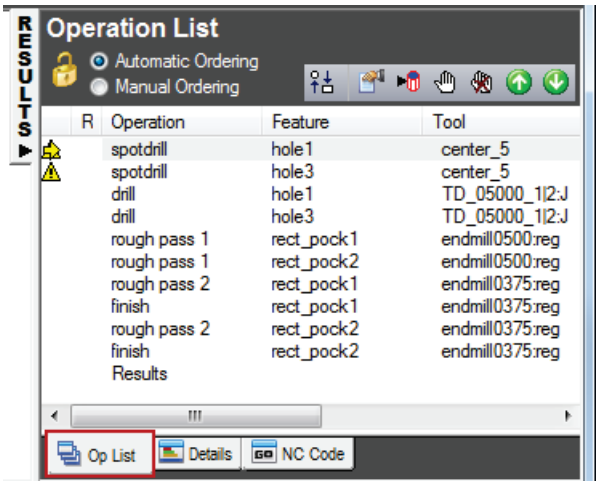

This section looks at:

- The automatic ordering options. (see page 16)
- The manual ordering options. (see page 18)

Automatic ordering operations

You can control the automatic ordering of operations by using either rules or operation templates. The turning tutorial looks at operation templates (see page 38).

1. Select the **Automatic Ordering** option on the **Op List** tab. This ensures the automatic ordering rules are applied to the operations.
2. Change the automatic ordering to group together the operations which use the same tool.
   a. Click the **Ordering Options** button.
   b. In the **Automatic Ordering Options** dialog, select **Minimize tool changes**, deselect everything else, and click **OK**.

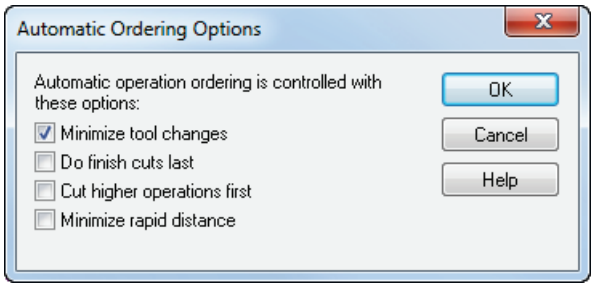

3. Simulate the part.
   a. Select the **Toolpaths** step from the **Steps** panel.

      This displays the **Simulation** toolbar.
   b. Click the **3D Simulation** button.
   c. Click the **Play** button.

      If the **Automatic Ordering Options** dialog appears, click **OK** to close it. Notice that the simulation first performs all the spot-drills, then the drills, and then the rough and finish milling for the pockets.
   d. Click the **Stop** button when simulation is complete to exit the simulation mode.
4. Change the automatic ordering to move the finish operations to the end of the list.

a Click the **Ordering Options** button.

b In the **Automatic Ordering Options** dialog, select **Do finish cuts last**, deselect everything else, and click **OK**.

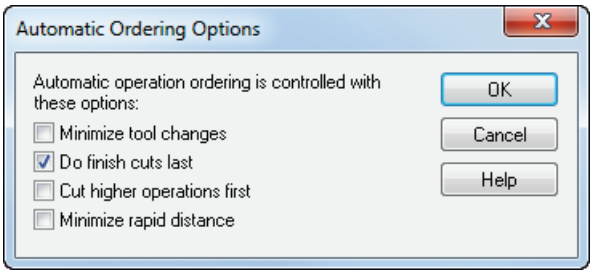

This changes the order of operations in the **Operation List**.

5 Simulate the part.

a In the **Simulation** toolbar, click **Play**.

The finish cuts for the two pockets are now cut last.

b Click **Stop** when simulation is complete.

6 Change the automatic ordering to match the order of the features in the **Part View** panel.

a Click the **Ordering Options** button.

b Deselect everything, and click **OK**.

c Open the **Part View** panel by clicking on Part View. The tree view contains all the setups and features you have created.

d Click the **rect_pock2** item in the **Setup1** node, and drag it up above **hole2**.

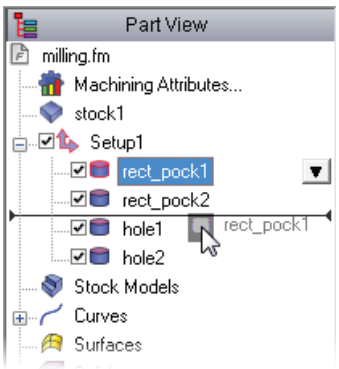

7 Simulate the part.

a In the **Simulation** toolbar, click **Play**.

The second pocket is cut as the second feature.

b Click **Stop**.

Manual ordering options

The automatic ordering of operations determined the order by a set of rules. You can also specify an exact ordering of operations manually.

1. Select the **Manual Ordering** option on the **Op List** tab.
2. In the **Fixed Operation Ordering** dialog, select **Do Not Show This Warning Again**, and click **OK**.

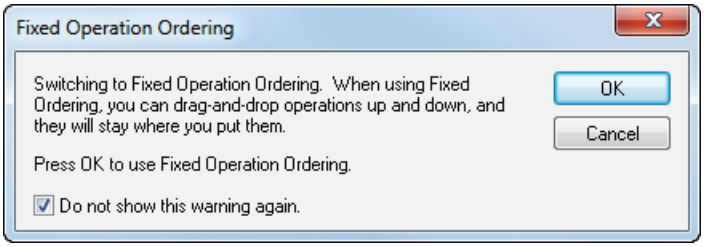

3. Select the **spotdrill** operation for **hole2** from the list, and drag it up ahead of the **drill** operation for **hole1**.

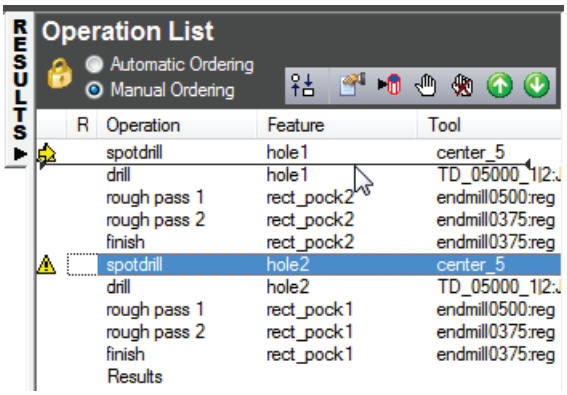

4. Simulate the part.
   a. In the **Simulation** toolbar, click **Play**. The simulation performs the operations in the new order.
   b. Click **Stop** when simulation is complete.
5. Selecting **Automatic Ordering** to return to automatic ordering.
6. Click **OK** to close the **Automatic Operation Ordering** dialog.

*If you want to erase the simulation and remove the **Simulation** toolbar, click **Eject**.*

Part documentation

As well as simulating the part manufacture, the simulation generates tool and operation lists. The tools selected are based on your tool database. You can print this information to use as an operator's checklist, using the **File > Print** menu option.

1. Click the **Details** tab in the **Results** window to display the Manufacturing Operations sheet.

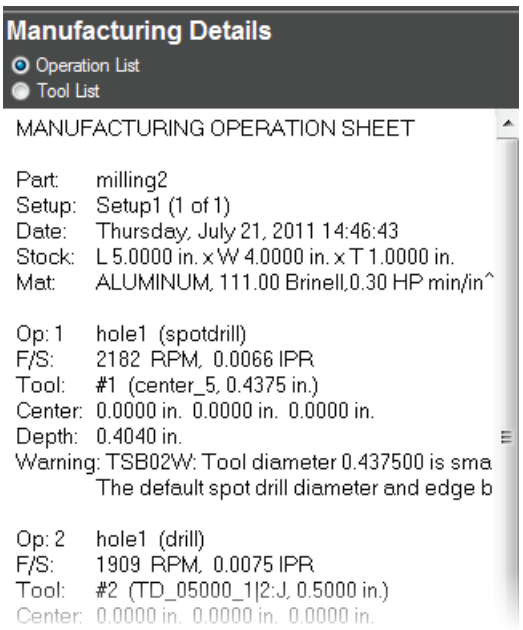

2. Select the **Tool List** option at the top of the **Details** tab to show the Manufacturing Tool Detail sheet. It contains all of the tools used to create the part based on the tool crib you selected.

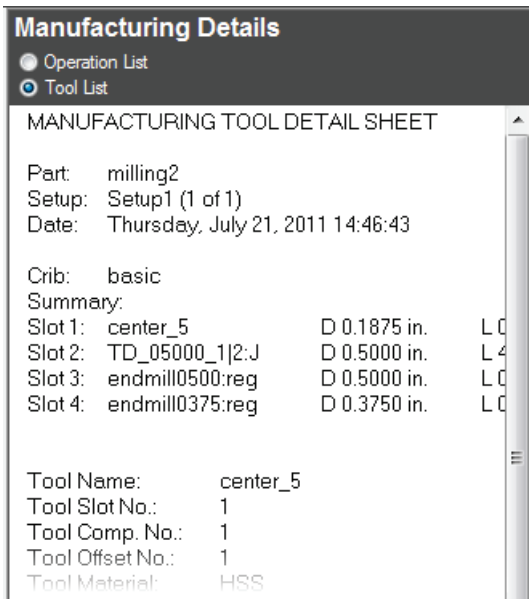

Controlling the strategies

You can control the strategies used to manufacture the part from the properties dialog.

1 Open the **Part View** panel.

2 Right-click on **hole1** under the **Setup1** node, and select the **Properties** option.

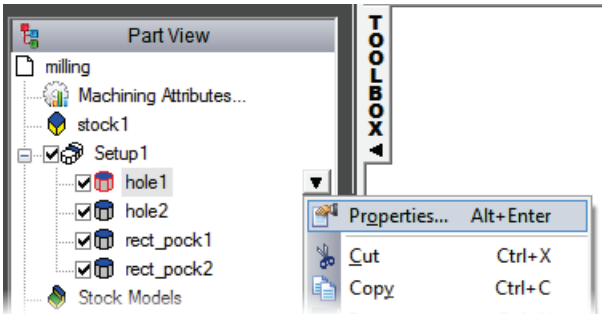

3 In the **Properties** dialog:

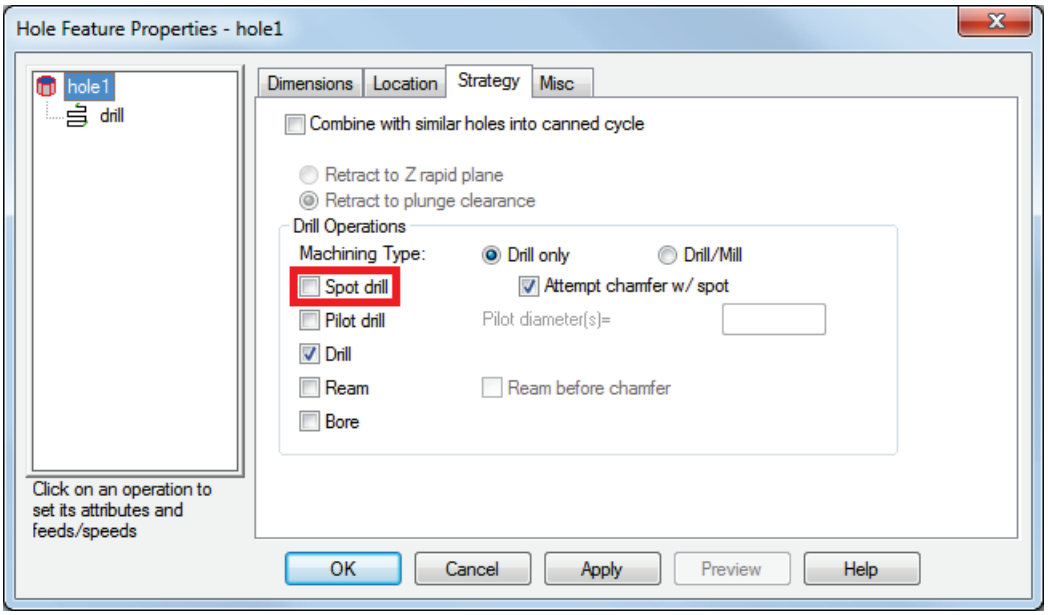

a Select the **Strategy** tab

b Deselect the **Spot Drill** option

c Click **OK**.

4 Select the **Toolpaths**  step from the **Steps** panel.

5 In the **Simulation** toolbar, click the **3D Simulation**  button, and then click **Play**  to start the simulation.

*There is no spot drilling for the first hole. If you look through the operations list, there is only one **spotdrill** operation listed. FeatureCAM optimizes the part manufacturing process, but you control the level of automatic optimization.*

6 Click **Eject** . This removes the **Simulation** toolbar.

Generating NC code

FeatureCAM generates the NC code to manufacture parts on a CNC machine. You can generate NC code after you have simulated the part, and therefore calculated the toolpaths.

1 Select the **NC Code** step from the **Steps** panel. This displays the **NC Code** dialog.

2 Click the **NC Program** button to generate the code.

NC Code

```
.N10G70G94G75G90
'milling2  7-21-2011'
'HOLE1'
'TOOL NUMBER:1'
'SPINDLE RPM:2182'
N35G0X0.Y0.T1M6
N40S2182
N45X0.Y0.
N50Z0.1M8
.N55G81Z0.504F14.3
N60X0.
.N65G80
N70Z1.0
'HOLE1'
'TOOL NUMBER:2'
' SPINDLE RPM:1909'
N90G0X0.Y0.T2M6
N95G94F14.3S1909
N100X0.Y0.
N105Z0.1
.N110G83Z1.2502Z0.6Z0.25F14.3
N115X0.
.N120G80
N125Z1.0
N130X4.0Y3.0Z0.1
.N135G83Z1.2502Z0.6Z0.25F14.3
N140X4.0
.N145G80
N150Z1.0
'RECT_POCK2'
'TOOL NUMBER:3'
```

Tool mapping

To change the location of the tools in the tool changer:

1 Select the **NC Code** step from the **Steps** panel. This displays the **NC Code** dialog.

2 Click the **Tool Mapping** button. This displays the **Tool Mapping** showing the current tool order.

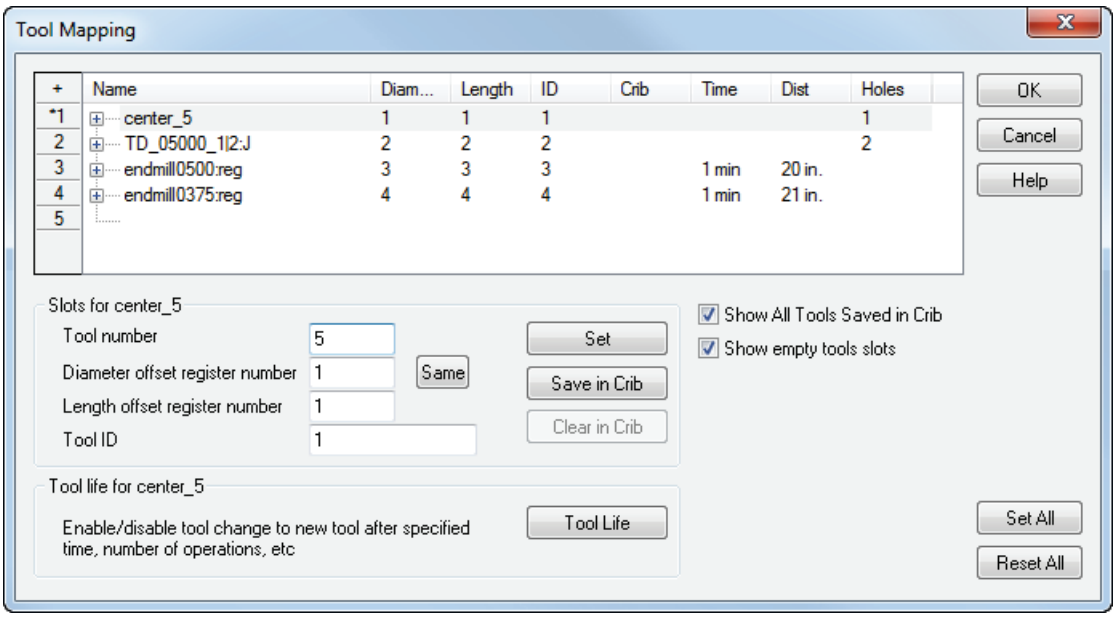

3 To move the center drill to the 5th position in the tool changer:

   a Select **Center_5** in the table.

   b Enter a **Tool Number** of 5 in the **Slots** frame.

   c Click **Set**.

   You cannot change the number in the table.

4 Click **OK** to save the changes, and close the **Tool Mapping** dialog.

Changing the post processor

To change the post processor:

1 Select **Manufacturing > Post Process** from the menu. This displays the **Post Options** dialog.

2 Click **Browse** to view available post processors.

   The default folder for posts is C:\Program Files\Delcam\Examples\Posts.

3 Select your post processor and click **Open**.

The new post processor is displayed in the **CNC File** field.

4 Click **OK** to exit the **Post Options** dialog and use the new post processor; click **Cancel** to exit the dialog and keep the original post processor.

5 Select the **Toolpaths**  step from the **Steps** panel.

6 Run a simulation of the part to regenerate the NC code.

Saving the NC code

To save an NC program:

1 Select the **NC Code**  step from the **Steps** panel. This displays the **NC Code** dialog.

2 Click the **Save NC**  button in the **NC Code** dialog.

3 In the **Save NC** dialog, accept the default filename and folder, and click **OK**.

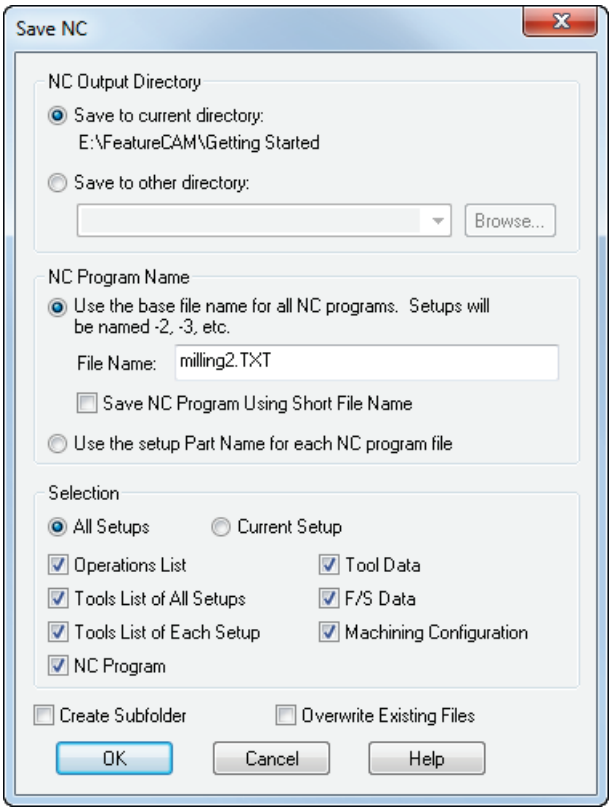

Introduction to turning

This tutorial shows you how to create a simple part, generate toolpaths and output the toolpaths used to machine the part.

1. Start FeatureCAM (see page 2).
2. Create a new file (see page 4), but select a **Type** of **Turn/Mill Setup** or **Turning Setup**.
3. Create the stock (see page 24).
4. Preparatory steps (see page 26).
5. Defining the geometry (see page 27).
6. Creating the features (see page 30).
7. Viewing the part (see page 35).
8. Simulating the toolpaths (see page 37).
9. Order of manufacturing operations (see page 38).
10. Part documentation (see page 40).
11. Changing the post processor (see page 22).
12. Generating NC code (see page 41).
13. Saving the NC code (see page 23).

Defining the stock

The stock is the initial material from which you cut your part. By default, the **Stock** wizard (**Dimensions** page) opens on the screen as soon as you create a new part. It enables you to set the shape and dimensions for the stock, the stock material, part program zero, and the coordinate system for modeling.

1 On the **Dimensions** page of the **Stock** wizard:

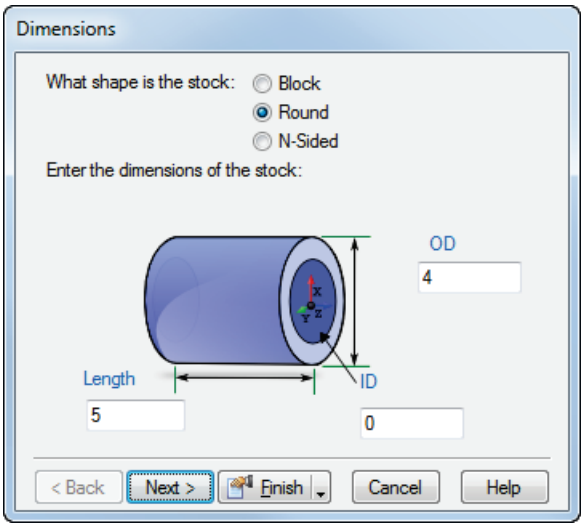

a Enter an **OD** (outside diameter) of **4** (**100** mm).

b Enter a **Length** of **5** (**125** mm).

c Enter an **ID** (inside diameter) of **0** (**0** mm).

d From the **Finish** menu button select the **Finish and Edit Properties** option.

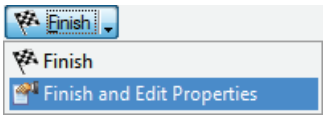

This displays the **Stock Properties** dialog.

2 In the **Stock Properties** dialog enter a **Z** of **0.0625** (**1.5** mm), and click **OK**.

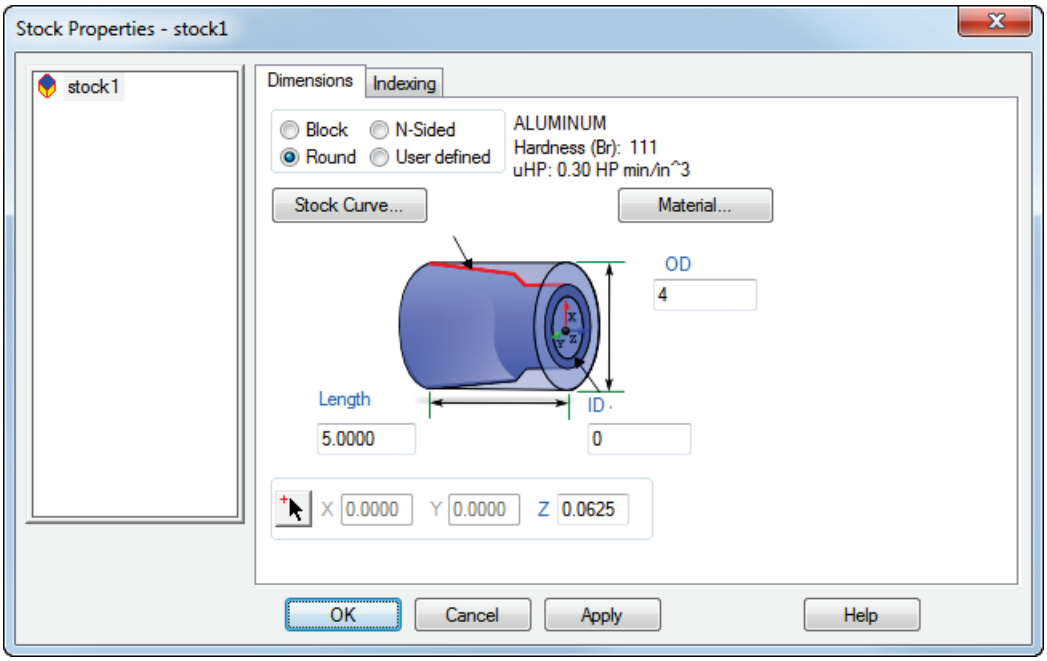

Preparatory steps

The preparatory steps determine the coordinate system and tool crib.

1. Select **Options > Turning Input Modes > 3D (XYZ)** from the menu to enable you to enter coordinates as **X**, **Y**, and **Z** values.
2. Select **Manufacturing > Set Tool Crib** from the menu to display the **Select Active Tool Crib** dialog.
3. Select the **tools** option from the **Crib List**, and click **OK**.
4. To display the complete part:
   a. Click the **Rotate View** menu button to display the **View** menu:

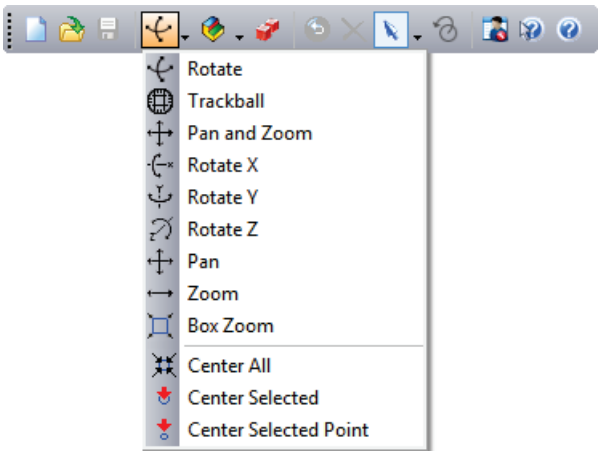

   b. Click **Center All**.

Defining the geometry

This shows you how to design your part.

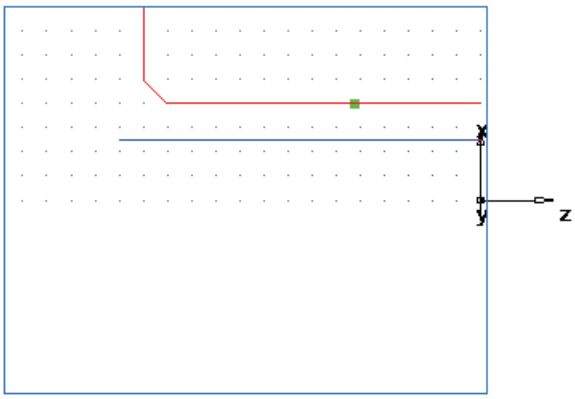

1 Draw two lines:

a Click the **Geometry**  step in the **Steps** panel. This displays the **Geometry Constructors** dialog.

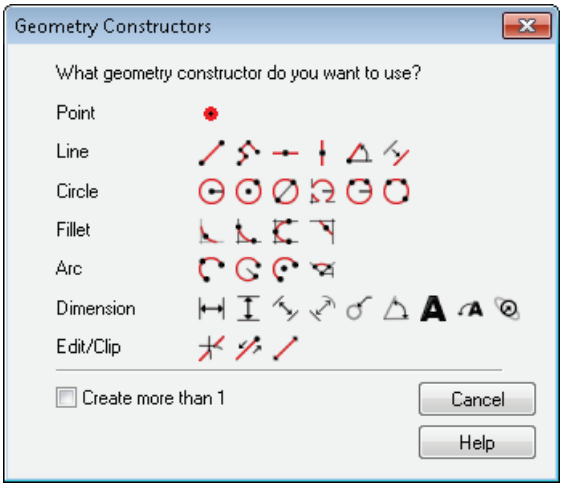

b Select the **Create more than 1** option, and click the **Line from two points**  button. This displays the **Feature/Geometry Edit** bar.

c Create two lines that define the outer profile, in the **Feature/Geometry Edit** bar:

For point 1, enter an **XYZ 1** of **X** 2 (50 mm), **Y** 0, **Z** -3.5 (-88 mm).

For point 2, enter an **XYZ 2** of **X** 1 (25 mm), **Y** 0, **Z** -3.5 (-88 mm).

Press **Enter**. This draws a line in the graphics window.

d Create a second line:

For point 1 enter an **XYZ 1** of **X** 1 (25 mm), **Y** 0, **Z** -3.5 (-88 mm).

For point 2 enter an **XYZ 2** of **X** 1 (25 mm), **Y** 0, **Z** 0.

Press **Enter** to create a second line.

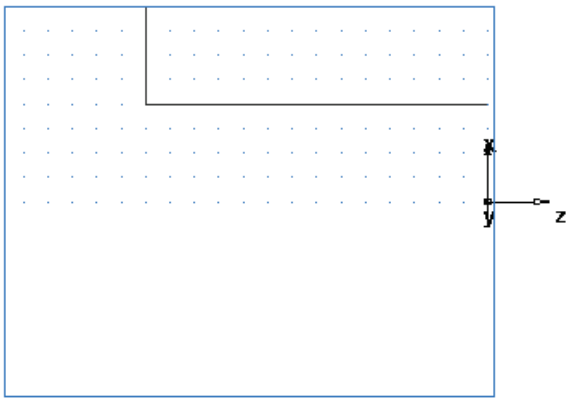

2 Create a chamfer to trim your lines.

a Click the **Geometry**  step in the **Steps** panel.

b In the **Geometry Constructors** dialog, in the list of **Fillet** options click the **Chamfer**  button.

c In the **Feature/Geometry Edit** bar, enter:

A **width** of 0.25 (6 mm).

A **height** of 0.25 (6 mm).

d Position your mouse pointer close to the chamfer location. The chamfer snaps into place.

e Click to place the chamfer on your drawing. The chamfer automatically trims your lines.

3 To turn the part you need to convert these three individual lines into a single curve (chain the curve).

a Select the **Curves**  step from the **Steps** panel.

b In the **Curves Creation** dialog, select the **Pick Curve Pieces**  button.

c In the graphics window, click locations 1, 2, and 3. Each line segment changes color when selected.

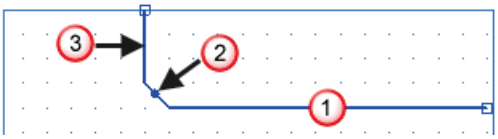

d In the **Feature/Geometry Edit** bar, name the curve **turn**, and press **Enter**.

4 Create third line which you will use to create a Bore feature.

a Click the **Geometry**  step in the **Steps** panel.

b In the **Geometry Constructors** dialog, click the **Line from two points**  button.

c In the **Feature/Geometry Edit** bar:

For point 1 enter an **XYZ 1** of **X** **0.625** (**16** mm), **Y** **0**, **Z** **0**.

For point 2 enter an **XYZ 2** of **X** **0.625** (**16** mm), **Y** **0**, **Z** **-3.75** (**-94** mm).

d Press **Enter**.

5 To chain the bore curve:

a Select the **Curves**  step from the **Steps** panel.

b In the **Curves Creation** dialog, select the **Pick Curve Pieces**  button.

c In the graphics window, click locations **4** and **5** (you select the same line twice).

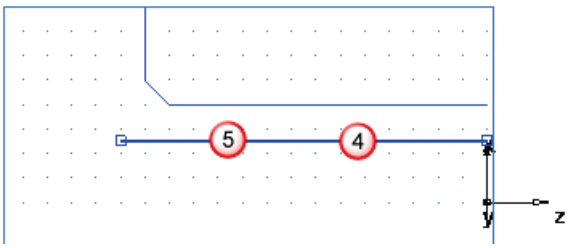

d In the **Feature/Geometry Edit** bar, name the curve **bore**, and press **Enter**.

Creating the features

This shows you how to create the turning features.

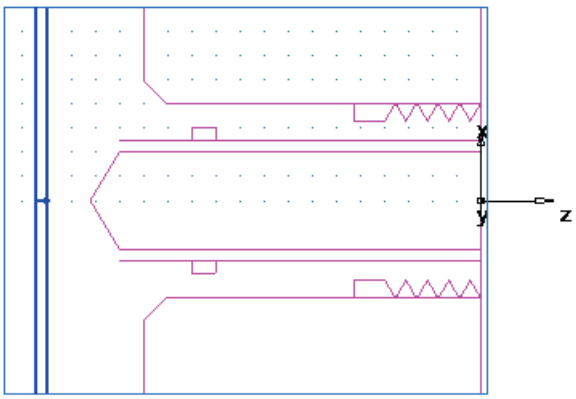

1 Select the **2D Turned Profiles** button, on the **Display Mode** toolbar, to switch to a simplified 2D representation of the part.

*To open the **Display Mode** toolbar, select the **View > Toolbars** menu option, select the **Display Mode** option, then click **OK**.*

2 Create a Turn feature.

a Click the **Features** step in the **Steps** panel.

b If you have the Turn/Mill module, the **New Feature** wizard asks you which type of feature you want to create. Select the **Turning** option, and click **Next**.

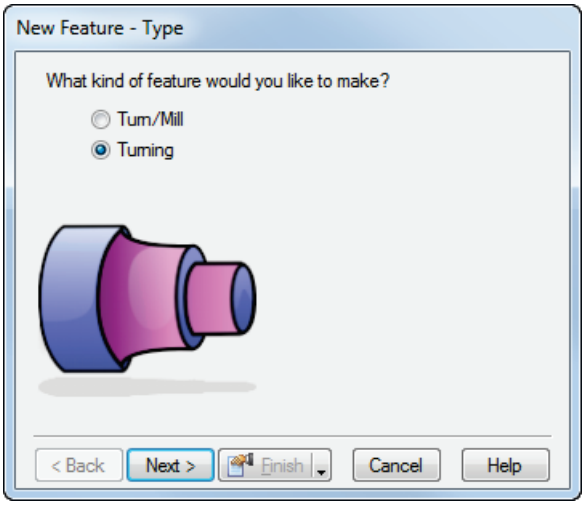

c Select **Turn** in the **From Curve** section, and click **Next**.

d In the **Curve** field select **turn** from the list.

Click the **Pick Curve** button to select the curve graphically. The dialog minimizes to reveal the graphics window beneath.

Click the curve you named **turn** earlier.

In this particular case, two objects are available for selection: a line and a curve. Whenever your selection needs to be clarified, FeatureCAM opens the **Select** dialog.

In the **Select** dialog, select **turn**, and click **OK**.

e From the **Finish** menu button, select the **Finish and Create More** option to continue creating features.

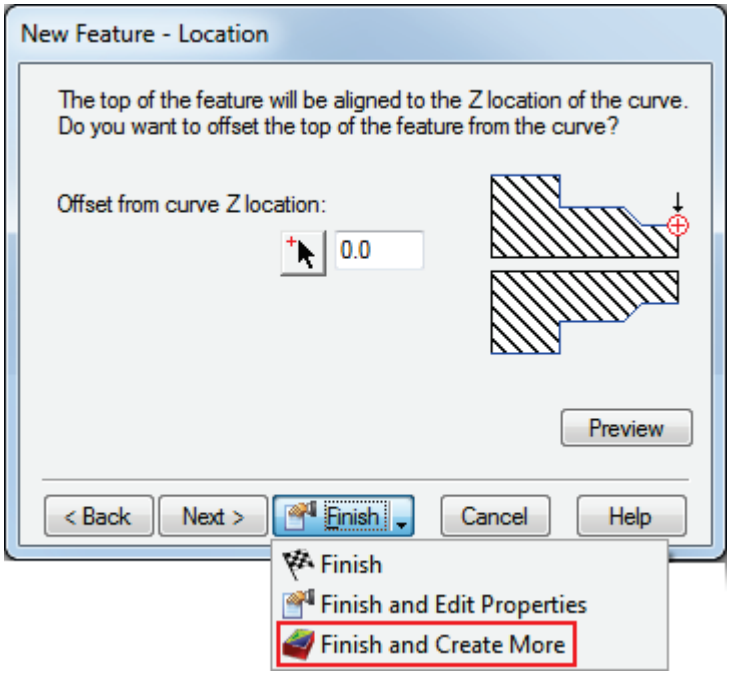

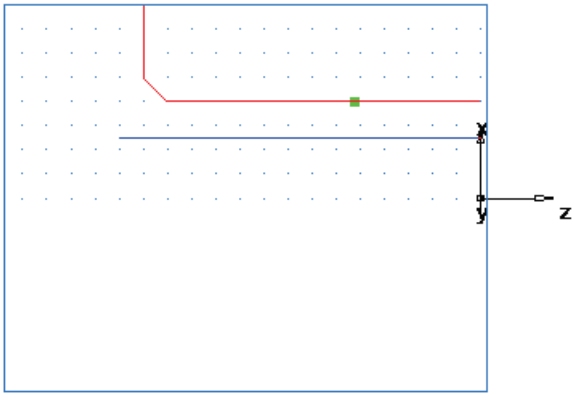

3 Create a Face feature.

a In the **New Feature** wizard, select the **Turning** option, and click **Next**.

b In the **From Dimensions** frame, select **Face**, and click **Next**.

c On the **Dimensions** page:

Enter a **Thickness** of **0.0625** (**1.5** mm).

Enter an **Outer Diameter** of **4** (**100** mm).

Enter an **Inner Diameter** of **0**.

Click **Next**.

d Click **Finish and Create More**.

4 Create a Hole feature.

a In the **New Feature** wizard, select the **Turning** option, and click **Next**.

b In the **From Dimensions** frame, select **Hole**, and click **Next**.

c On the **Dimensions** page:

Enter a **Depth** of **3.75** (**94** mm).

Enter a **Diameter** of **1.0** (**24** mm).

Click **Next**.

d On the **Location** page enter a **Z** of **0**.

e Click **Finish and Create More**.

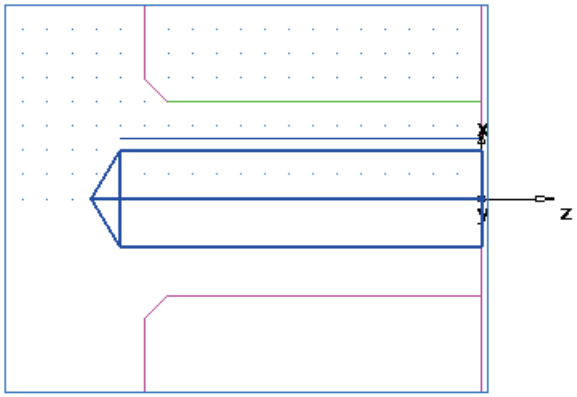

5 Create a Bore feature by using the same process you used to create the Turn feature. Use the curve named **Bore**.

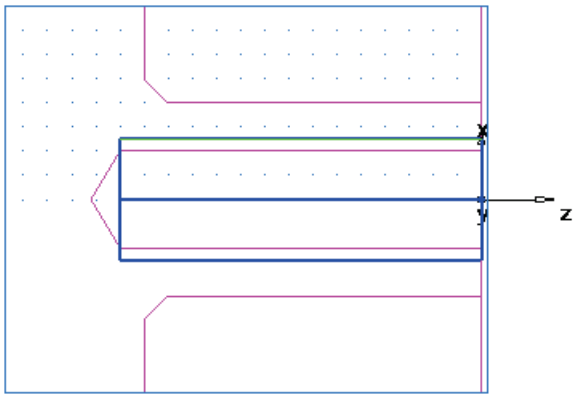

6 Create a Groove feature.

a In the **New Feature** wizard, select the **Turning** option, and click **Next**.

b In the **From Dimensions** frame select **Groove**, and click **Next**.

c On the **Dimensions** page:

Select a **Location** of **ID**.

Select an **Orientation** of **X axis**.

Enter a **Diameter** of **1.25** (**31** mm).

Enter a **Depth** of 0.125 (3 mm).

Enter a **Width** of 0.25 (6 mm).

Leave the other settings at 0.

Click **Next**.

d On the **Location** page enter a **Z** of -3 (-75 mm).

e Click **Finish and Create More**.

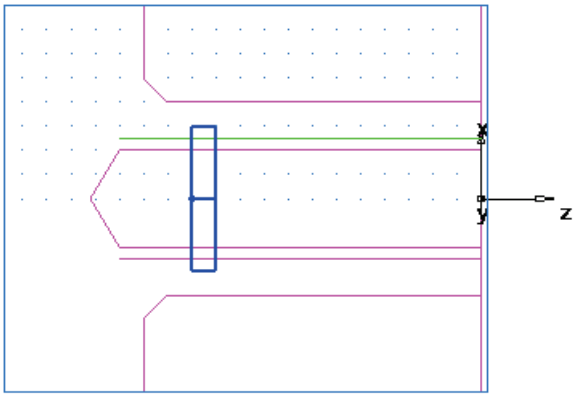

7 Create a Thread feature.

a In the **New Feature** wizard, select the **Turning** option, and click **Next**.

b In the **From Dimensions** frame, select **Thread**, and click **Next**.

c On the **Dimension** page:

Select **Get the thread dimensions from a standard thread**.

Select **OD**.

In the **Designation** field select the 2.0000- 4.5 UNC (M50-15 for metric).

Click **Next**.

d On the **Dimensions** page:

Select a **Thread** of **Right hand**.

Enter a **Thread Length** of 1.0 (24 mm).

Click **Next**.

e Click **Finish and Create More**.

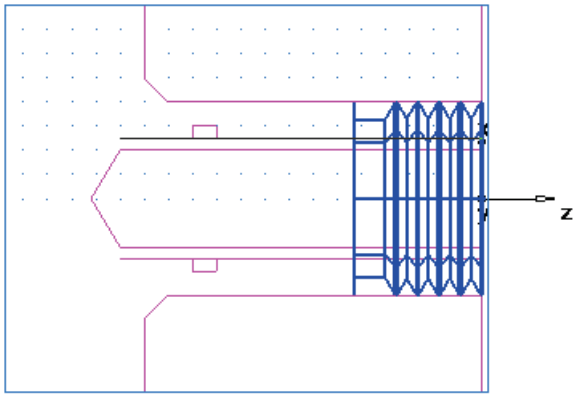

8 Create a Cutoff feature.

a In the **New Feature** wizard, select the **Turning** option, and click **Next**.

b In the **From Dimensions** frame select **Cutoff**, and click **Next**.

c On the **Dimensions** page:

Enter a **Diameter** of **4** (**100** mm).

Enter an **Inner Diameter** of **0**.

Enter a **Width** of **0.122** (**3** mm).

Click **Next**.

d On the **Location** page enter a **Z** of **–4.5** (**–112** mm).

e Click **Finish**.

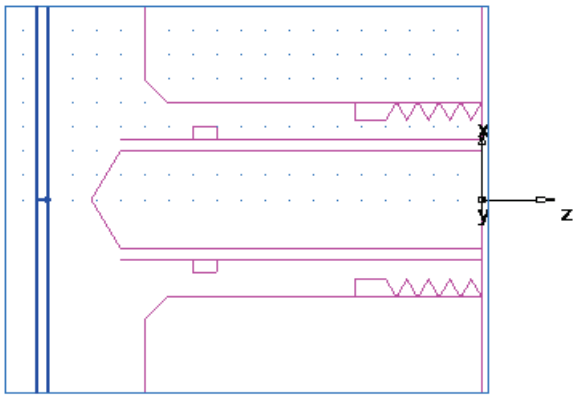

Viewing the part

You have been working in a 2D view.

To look at the part in a different orientation you can select one of the standard predefined views. These options are available from the **Standard** toolbar:

1 To return to a 3D view of the model, click the **2D Turned Profiles** button, on the **Display Mode** toolbar.

2 Click the **Isometric View** button on the **Standard** toolbar.

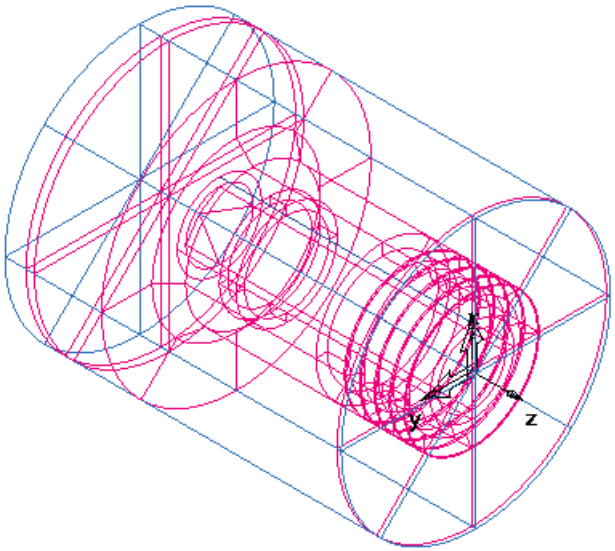

3 Shade the part.

   a Open the **Part View** panel, and select **bore1** under the **Setup1** node.

   b Click the **Shade Selected** button on the **Display Mode** toolbar.

   c Select **thread1** in the **Part View** panel.

   d Click the **Shade Selected** button again.

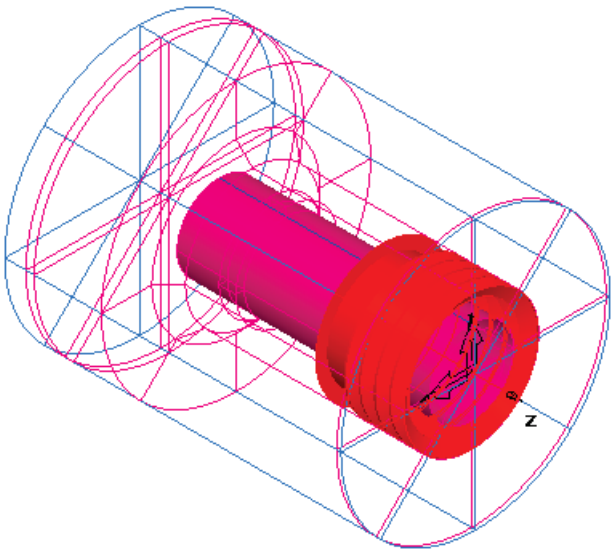

4 Click the **Unshade All** button on the **Display Mode** toolbar to return to the wireframe view.

Simulating the toolpaths

Now you have created the features, FeatureCAM automatically:

- Selects the most appropriate tools and operations;
- Recommends machining strategies;
- Calculates speeds and feeds;
- Generates toolpaths and creates the NC code.

To view the simulated toolpath:

1 Click the **Toolpaths** step in the **Steps** panel. This displays the **Simulation** toolbar.

2 Select the **3D Simulation** option, and then click **Play** to start the simulation. If the **Automatic Ordering Options** dialog appears, click **OK** to close it. This accepts the default ordering options.

This displays a solid 3D rendering of the cutting process. By default, the 3/4 view is shown when cutting or drilling the ID of the part.

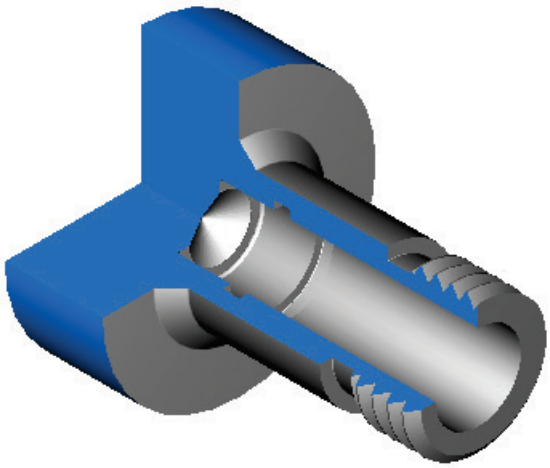

*If the 3/4 view is not displayed, select **Options > Simulation > Round Stock** from the menu, select the **3/4 view with lathe ID work** option, then click **OK** to close the dialog. Click the **Play** button on the **Simulation** toolbar to see the changes.*

3 Click the **Play to Next Operation** button. This displays the face operation.

4 Repeat step 3 to view each operation until the whole part is cut.

5 Click **Eject** . This removes the simulation.

Order of manufacturing operations

The **Op List** tab in the **Results** window shows all of the operations needed to machine the features. A yellow warning ⚠ sign next to an operation indicates a potential problem with that operation. In this case, if you see any warnings ignore them.

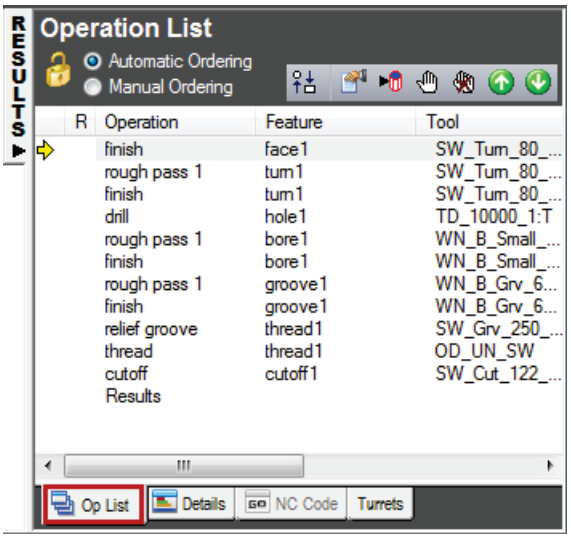

You can control the automatic ordering of operations by using either rules or operation templates. The 2.5D Milling tutorial looks at using rules (see page 16).

This section changes the automatic ordering by modifying the **Turn Operation** template.

To modify the template

1 Select the **Automatic Ordering** option on the **Op List** tab. This ensures the automatic ordering rules are applied to the operations.

2 Change the automatic ordering to group together the operations which use the same tool.

   a Click the **Ordering Options** button.

b In the **Automatic Ordering Options** dialog, select **Use template**.

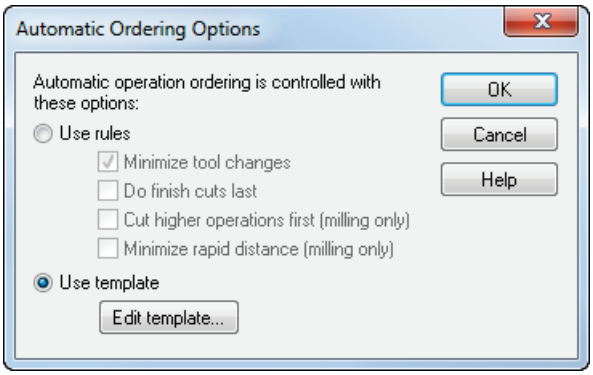

c Click **Edit template**.

3 In the **Feature Order** dialog:

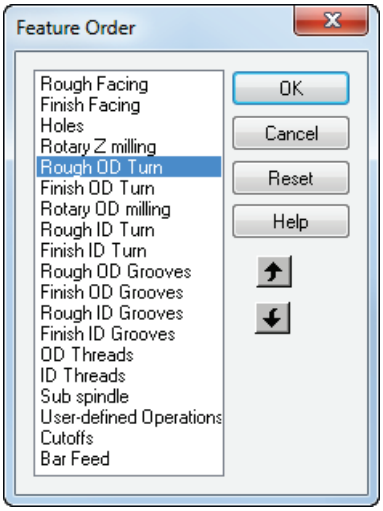

a Select **Rough OD Turn**.

b Click until **Rough OD Turn** is below **Finish ID Turn**.

c Click **OK** to close the **Feature Order** dialog.

4 Click **OK** to close the **Automatic Ordering Options** dialog.

5 Simulate the part.

a Select the **Toolpaths** step from the **Steps** panel. This displays the **Simulation** toolbar.

b Click the **3D Simulation** button, and then click the **Play** button to start the simulation.

Notice that the OD roughing and finishing now happen after the hole is drilled.

c Click the **Stop** button when simulation is complete to exit simulation mode.

Part documentation (Turning)

As well as simulating the manufacturing of the part, the simulation also generates complete tool and operations lists. The tools selected are based on your tool database. You can print all of this information for use as an operator's checklist.

1 Click the **Details** tab in the **Results** window to display the Manufacturing Operations sheet.

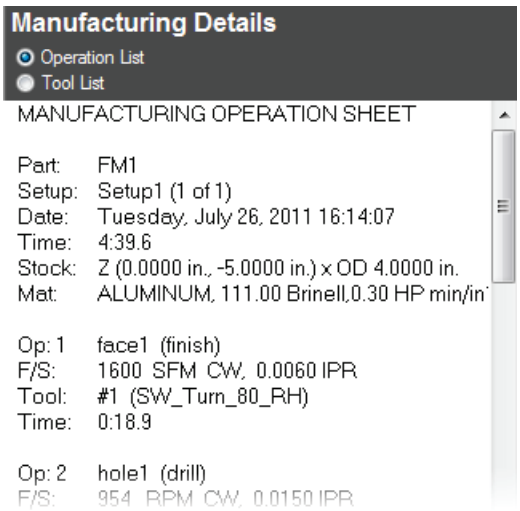

You can review this sheet using the scroll bars.

2 Select the **Tool List** option at the top of the **Details** tab to show the Manufacturing Tool Detail sheet. It contains all of the tools used to create the part based on the tool crib you selected.

*You can print this documentation from the **File > Print** menu option.*

Generating NC code (Turning)

FeatureCAM generates the NC code to manufacture parts on a CNC machine. You can generate NC code after you have simulated the part, and therefore calculated the toolpaths.

1. Select the **NC Code** step from the **Steps** panel. This displays the **NC Code** dialog.
2. Click the **Display the NC Code** button to generate the NC code.

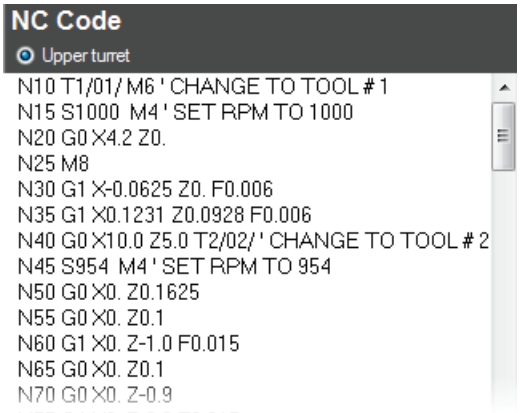

Changing the post processor

To change the post processor:

1. Select **Manufacturing > Post Process** from the menu. This displays the **Post Options** dialog.
2. Click **Browse** to view available post processors.

   The default folder for posts is C:\Program Files\Delcam\Examples\Posts.
3. Select your post processor and click **Open**.

   The new post processor is displayed in the **CNC File** field.
4. Click **OK** to exit the **Post Options** dialog and use the new post processor; click **Cancel** to exit the dialog and keep the original post processor.
5. Select the **Toolpaths** step from the **Steps** panel.
6. Run a simulation of the part to regenerate the NC code.

Saving the NC code

To save an NC program:

1. Select the **NC Code** step from the **Steps** panel. This displays the **NC Code** dialog.
2. Click the **Save NC** button in the **NC Code** dialog.
3. In the **Save NC** dialog, accept the default filename and folder, and click **OK**.

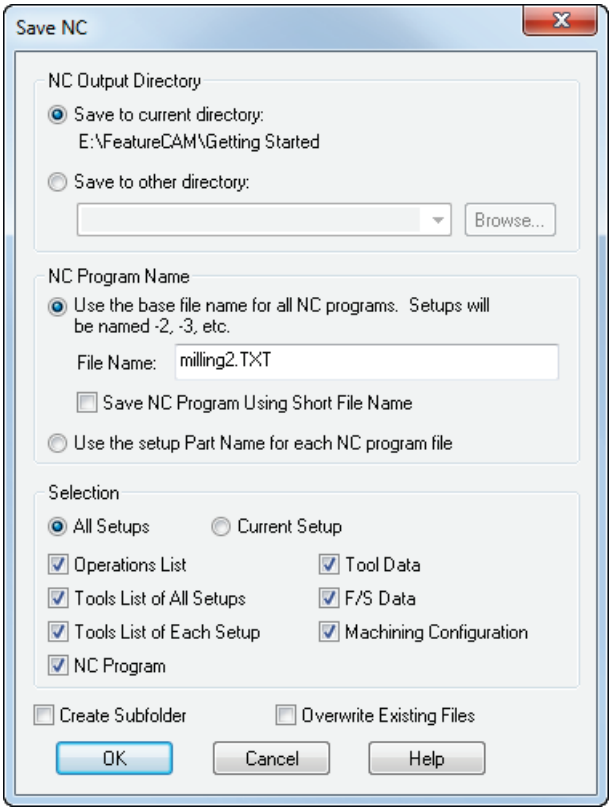

Introduction to turn/mill

This tutorial introduces you to:

- Creating parts for lathes with milling capabilities.
- Mixing turning and milling features.
- Creating milling features on the outside diameter and face of the part.
- Simulating a turn/mill part.

*You must have licensed the **Turn/Mill** option to run this tutorial.*

1. Start FeatureCAM (see page 2).
2. Create a new file (see page 4), but select a **Type** of **Turn/Mill Setup**.
3. Preparatory steps (see page 44).
4. Defining the geometry (see page 44).
5. Creating the features (see page 47).
6. Viewing the part (see page 48).
7. Creating three radial holes on the face (see page 49).
8. Engraving the face (see page 50).
9. Creating three slots (see page 53).
10. Simulating the toolpaths (see page 54).

Preparatory steps

The preparatory steps define the stock and determine the coordinate system and view.

1 On the **Dimensions** page of the **Stock** wizard:

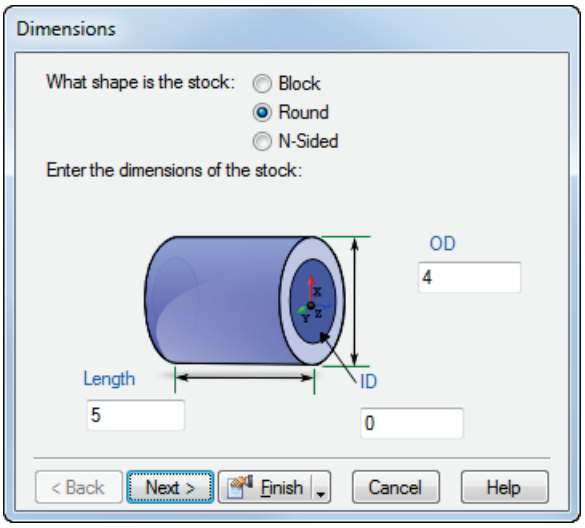

   a Select a shape of **Round**.

   b Enter an **OD** (outside diameter) of 3.

   c Enter a **Length** of 2.

   d Enter an **ID** (inside diameter) of 0.

2 Click **Next** until you reach the **Part Program Zero** page.

3 Select **Align to stock face**.

4 Click **Next**.

5 Click to position the datum of the part.

6 From the **Finish** menu, select the **Finish** button.

7 From the **View** menu select **Center All**.

8 Select **Options > Turning Input Modes > Diameter (DZ)** from the menu to enter coordinates as **Diameter** and **Z** values.

Defining the geometry

This shows you how to design your part.

1 Draw three lines:

a Select the **Geometry**  step from the **Steps** panel. This displays the **Geometry Constructors** dialog.

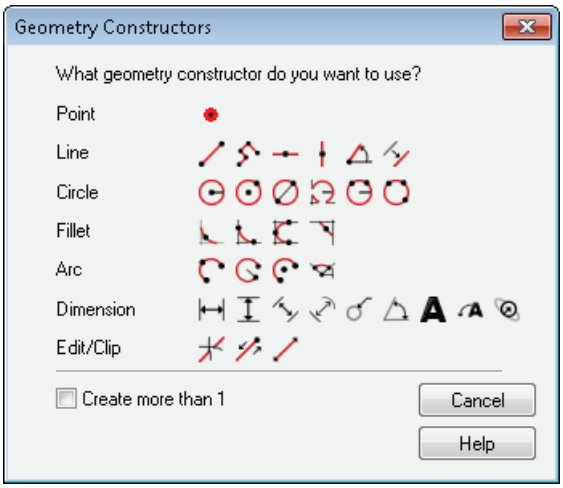

b Select the **Create more than 1** option, and click the **Connected Lines**  button. This displays the **Feature/Geometry Edit** bar.

c To create two lines that define the outer profile, in the **Feature/Geometry Edit** bar:

For point 1 enter a **D/Z 1** of **D** 2.5, **Z** 0.

For point 2 enter a **D/Z 2** of **D** 2.5, **Z** -1.5.

Press **Enter** to create a line.

d Create a second line with the values:

For point 2 enter a **D/Z 2** of **D** 2.75, **Z** -1.5.

Press **Enter** to create a second line.

e Create a third line with the values:

For point 2 enter a **D/Z 2** of **D** 2.75, **Z** -2.

Press **Enter** to create a third line.

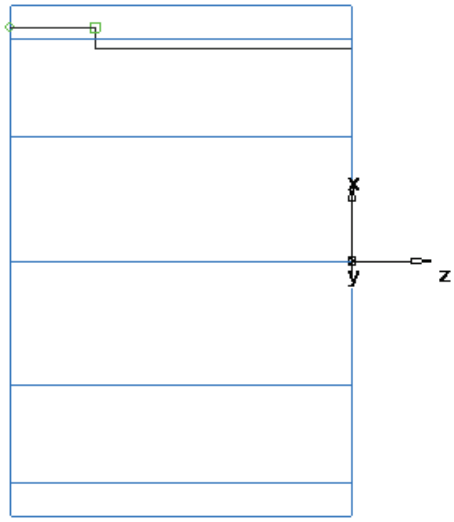

2 Create a Fillet to trim your lines.

a Select the **Geometry**  step from the **Steps** panel.

b In the **Geometry Constructors** dialog, in the list of **Fillet** options click the **Corner Fillet**  button.

c In the **Feature/Geometry Edit** bar, enter a radius (**R**) of **0.125**.

d Position your mouse pointer in the corner between the first and second lines, and click to create the fillet. The fillet automatically trims your lines.

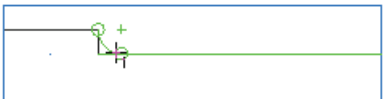

3 To turn the part you need to chain the curves.

a Select the **Curves**  step from the **Steps** panel.

b In the **Curves Creation** dialog, select the **Pick Curve Pieces**  button.

c In the graphics window, click the first line and then the third line.

d In the **Feature/Geometry Edit** bar, name the curve **Turn**, and press **Enter**.

Creating the features

This example shows you how to create the turning features.

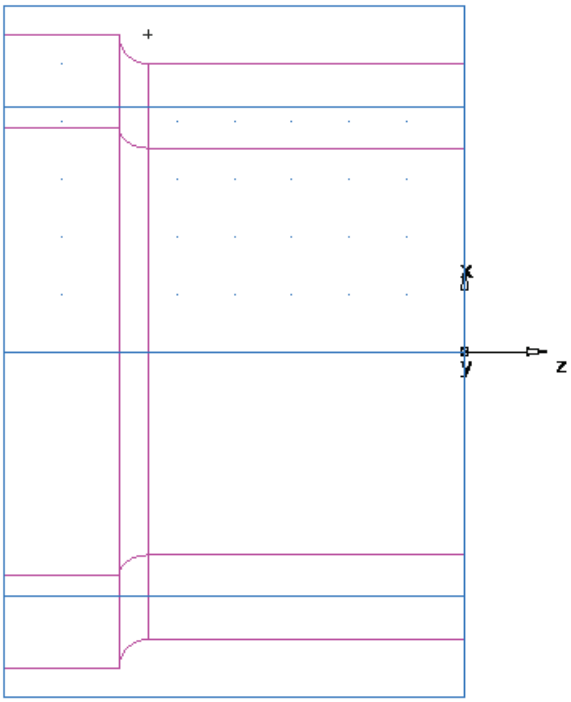

1 Click the **2D Turned Profiles** button, on the **Display Mode** toolbar, to switch to a 3D representation of the part.

2 Create a Turn feature.

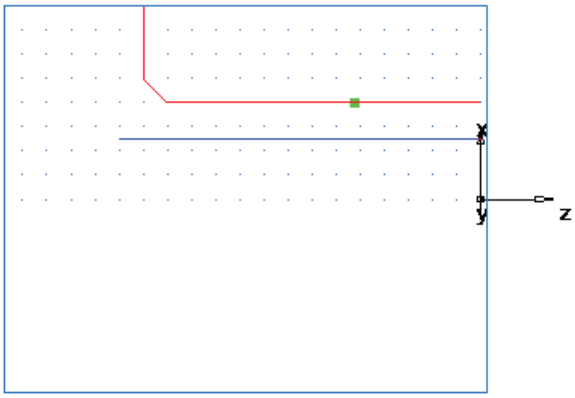

a Click the **Features** step in the **Steps** panel.

b In the **New Feature** wizard, select the **Turning** option, and click **Next**.

c Select **Turn** in the **From Curve** section, and click **Next**.

d In the **Curve** field select turn from the list.

Click the **Pick Curve** button to select the curve graphically. The dialog minimizes to reveal the graphics window beneath.

Click the curve you named **Turn** earlier.

In the **Select** dialog, select **turn**, and click **OK**.

e Click **Finish**.

Viewing the part

1 On the **Standard** toolbar select the **Isometric View** button.

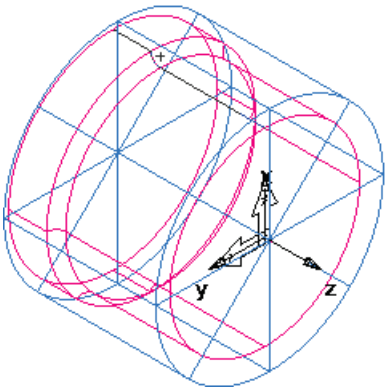

*If this displays a 2D representation of the part, click the **2D Turned Profiles** button, on the **Display Mode** toolbar.*

2 Shade the part:

a Open the **Part View** panel, and select **turn1** under the **Setup1** node.

b Click the **Shade Selected** button on the **Display Mode** toolbar.

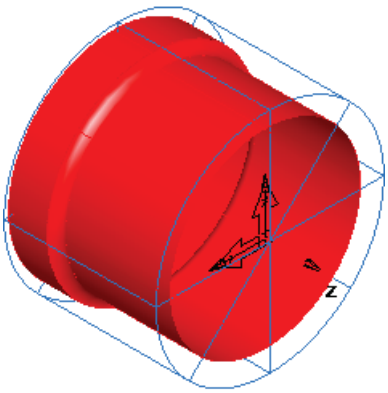

c Click the **Unshade All** button on the **Display Mode** toolbar to return to the wireframe view.

3 To change the view to a top view; from the **Principal View** menu button, click the **Top** button.

Creating three radial holes on the face

This shows you how to add three Holes to the part.

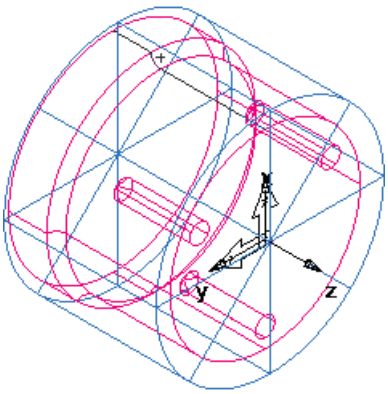

1 To return to a 2D view of the model, click the **2D Turned Profiles** button, on the **Display Mode** toolbar.

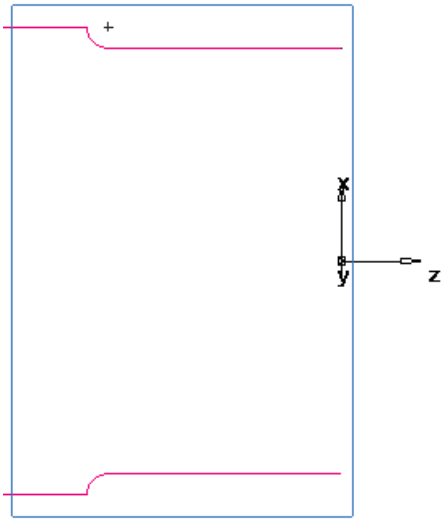

2 Create a Hole.

   a Click the **Features** step in the **Steps** panel.

   b In the **New Feature** wizard, select the **Turn/Mill** option, and click **Next**.

   c In the **From Dimensions** field, select **Hole** and click **Next**.

   d In the **Dimensions** dialog:

   Enter a **Chamfer** of **0.0**.

   Enter a **Depth** of **1.0**.

   Enter a **Diameter** of **0.25**.

   e Click **Finish and Create More**.

3 Create a Pattern from feature:

a In the **New Feature** wizard, select the **Turn/Mill** option, and click **Next**.

b In the **From Feature** field, select **Pattern**, and click **Next**.

c Select the hole you just created and click **Next**.

d Select **Radial in the setup XY plane**, and click **Next**.

e On the **Pattern - Dimensions** page:

Enter a **Number** of **3.0**.

Enter a **Diameter** of **2.0**.

Enter a **Spacing Angle** of **120**.

Enter an **Angle** of **60**.

f Click **Finish**.

g Click **Cancel**.

4 View the 3D wireframe representation of the part:

a Click the **2D Turned Profiles** button, on the **Display Mode** toolbar, to switch to a 3D representation of the part.

b Click the **Isometric View** button on the **Standard** toolbar.

Engraving the face

This shows you how to engrave the part by:

- Creating the engraving text.
- Creating a Groove feature.

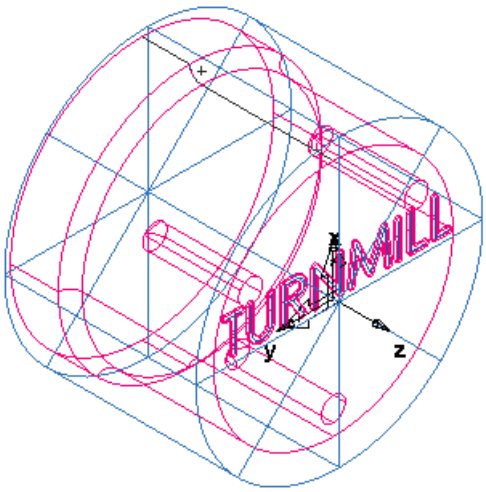

1 Create a curve.

a Select the **Curves** step from the **Steps** panel.

b In the **Curves Creation** dialog, select the **Curve Wizard** button.

c In the **Curve** wizard:

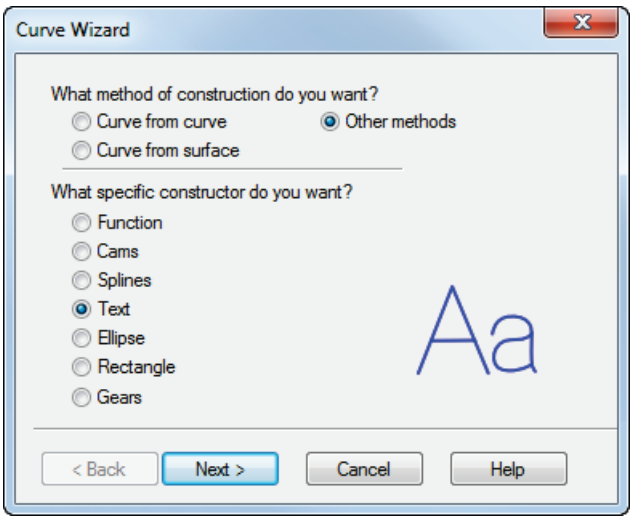

Select **Other methods** as the construction method.

Select **Text** as the constructor.

Click **Next**.

d On the **Engraving Text** page, configure the text properties.

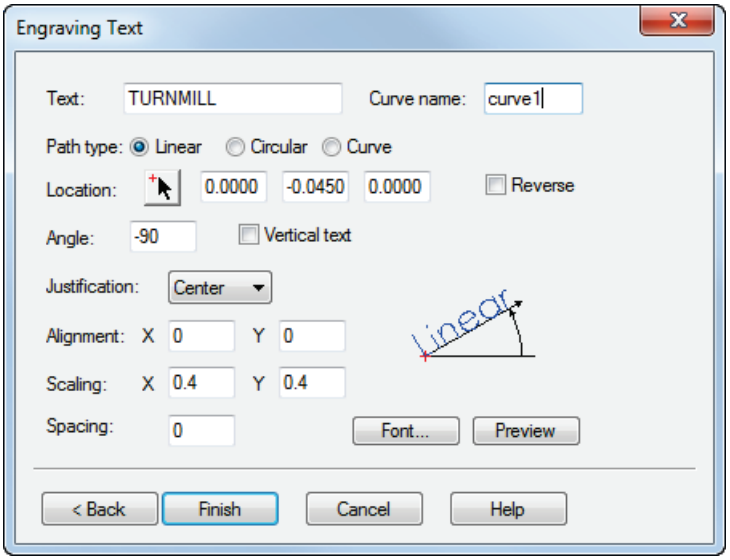

Enter a **Text** of **TURNMILL**.

Select a **Path type** of **Linear**.

Enter a location of **X 0.0, Y -0.045**, **Z 0.0**.

Enter an **Angle** of **-90**.

From the **Justification** list, select **Center**.

Enter a **Scaling** of **X 0.4, Y 0.4**.

Click the **Font** button to display the **Font** dialog.

From the **Font** list, select **Machine Tool Gothic**.

Enter a **Size** of **72**.

Click **OK** to close the dialog.

e Click **Finish** to close the wizard.

2 Create a Groove feature.

a Select the **TURNMILL** text (**curve1**) in the graphics window.

b Click the **Features**  step in the **Steps** panel.

c In the **New Feature** wizard, select the **Turn/Mill** option, and click **Next**.

d In the **From Curve** field, select **Groove**, and click **Next**.

e On the **Curve** page, click **Next** (as you have selected the text in step 2a).

f On the **Location** page, click **Next**.

g On the **Dimensions** page:

Enter a **Width** of **0.0625**.

Enter a **Depth** of **0.02**.

Select **Face**.

Select **Simple (Engrave)**.

h Click **Finish**.

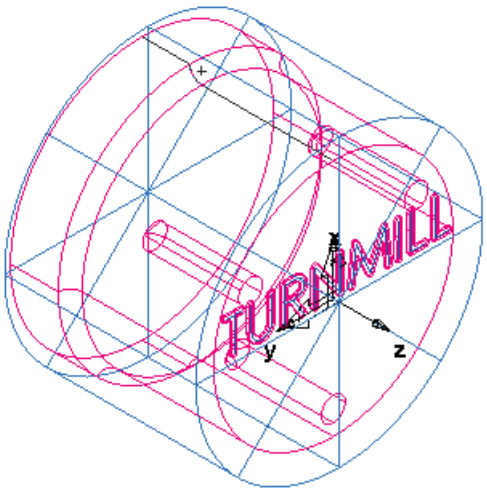

Creating three slots

This shows you how to add three milled slots to the part.

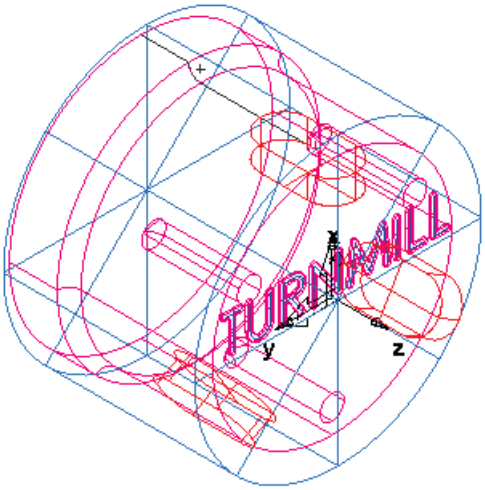

1 Create a Slot feature:

   a Click the **Features**  step in the **Steps** panel.

   b In the **New Feature** wizard, select the **Turn/Mill** option, and click **Next**.

   c In the **From Dimensions** section, select **Slot**.

   Select **Make a pattern from this feature**, and click **Next**.

   d On the **Dimensions** page:

   Enter a **Length** of **1.0**.

   Enter a **Width** of **0.5**.

   Enter a **Depth** of **0.25**.

   Click **Next**.

   e On the **Patterns** page select **Radial around index axis**, and click **Next**.

   f On the **Location** page:

   Enter a **B Angle** of **90**.

   Enter a **Radius** of **1.25**.

   Enter a **Z** to **0.25**.

   Click **Next**.

   g On the **Dimension** page:

   Enter a **Number** of **3**.

   Enter a **Spacing Angle** of **120**.

   h Click **Finish**.

Simulating the toolpaths

To view the simulated toolpath:

1. Click the **Toolpaths** step in the **Steps** panel. This displays the **Simulation** toolbar.
2. Select a CNC file for a machine that supports live tooling. For example:

   ..\Examples\Posts\TurnMill\Skeleton\skeleton-1-turret.cnc

3. Click the **3D Simulation** button, and then click the **Play** button to start the simulation. If the **Automatic Ordering Options** dialog appears, click **OK** to close it. This accepts the default ordering options.

   

   The toolpaths are accurately simulated including the part rotations.

4. Click **Eject**. This removes the **Simulation** toolbar.

Introduction to 3D milling

This tutorial introduces you to:

- Modeling 3D surfaces.
- Manufacturing surfaces using surface milling features.
- Manufacturing operations.
- Tool selection.
- 3D manufacturing attributes.

*You must have **3D milling** to perform the examples in this chapter. These examples are only specified in inch units. You must have the **basic** tool crib installed.*

This tutorial shows you how to create a simple part, generate toolpaths and output the toolpaths used to machine the part.

1. Start FeatureCAM (see page 2).
2. Create a new file (see page 4).
3. Defining the Stock (see page 56).
4. Defining the geometry (see page 56).
5. Creating the bottle surface (see page 60).
6. Viewing the part (see page 61).
7. Creating a surface milling feature (see page 63).
8. Simulating the toolpaths (see page 66).

Defining the Stock

The stock is the initial material from which you cut your part.

1 On the **Dimensions** page of the **Stock** wizard:

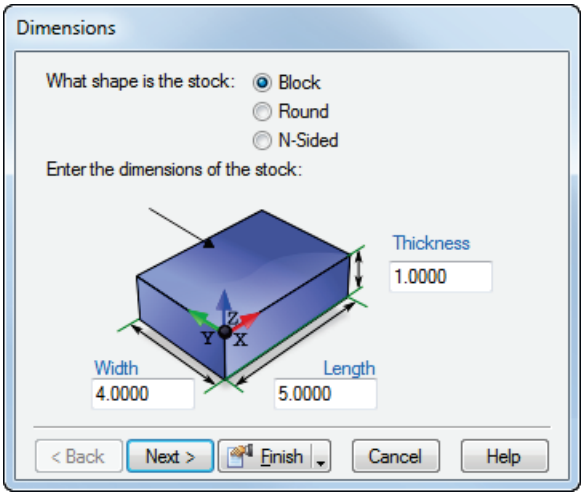

a Enter a **Thickness** of 2.

b Enter a **Width** of 3.

c Enter a **Length** of 6.25.

d Click **Finish**.

2 Click **OK** to accept the default values of the **Stock Properties** dialog.

Defining the geometry

This shows you how to design your part.

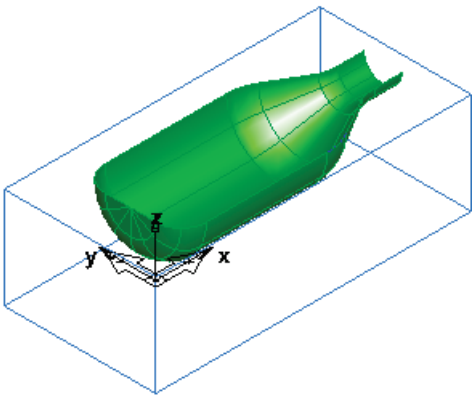

1 Select **View > Toolbars** from the menu, in the **Toolbars** frame:

a Select **Advanced**.

b Select **Geometry**.

c Click **OK**.

2 Create three vertical lines:

a On the **Geometry** toolbar, select **Vertical** from the **Line** menu.

b In the **Feature/Geometry Edit** bar, enter an **XYZ** of **X** 1, **Z** 0, and press **Enter**.

c Create a second line by entering an **XYZ** of **X** 5.25, **Z** 0, and press **Enter**.

d Create a third line by entering an **XYZ** of **X** 6, **Z** 0, and press **Enter**.

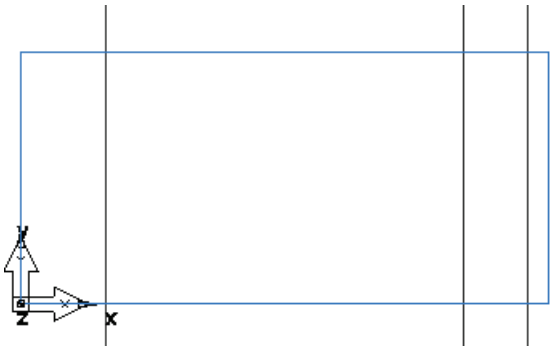

3 Create three horizontal lines:

a On the **Geometry** toolbar, select **Horizontal** from the **Line** menu.

b Enter an **XYZ** of **Y** 0.5, **Z** 0, and press **Enter**.

c Create a second line by entering an **XYZ** of **Y** 1.125, **Z** 0, and press **Enter**.

d Create a third line by entering an **XYZ** of **Y** 1.5, **Z** 0, and press **Enter**.

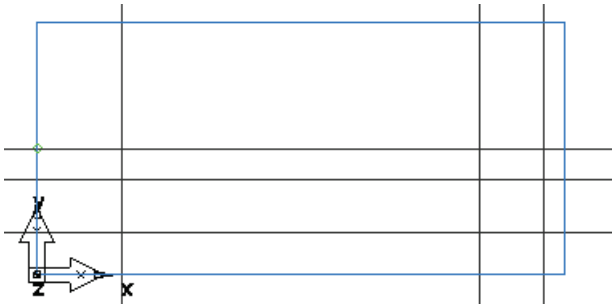

4 Create a through line:

a On the **Geometry** toolbar, select **Point, Angle** from the **Line** menu.

b In the **Feature/Geometry Edit** bar, enter an angle **A** of **30**.

c In the graphics window, click at the intersection between the second horizontal and second vertical lines, at point 1, to create a through line.

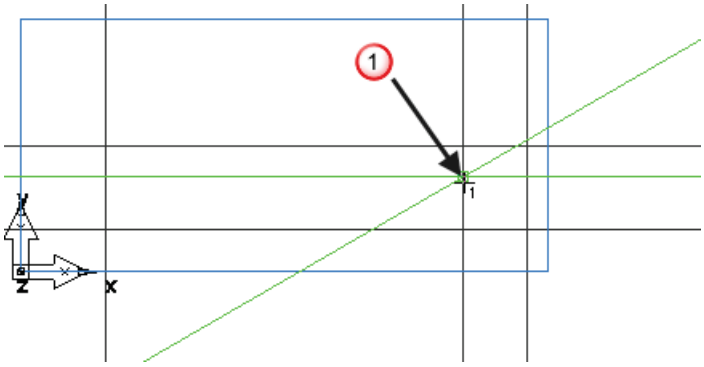

5 Create arcs.

a On the **Geometry** toolbar, select **2 Pts, Radius** from the **Arc** menu.

b In the **Feature/Geometry Edit** bar, enter a radius **R** of **0.5**, and click the vertical line around point 2 and the horizontal line around point 3.

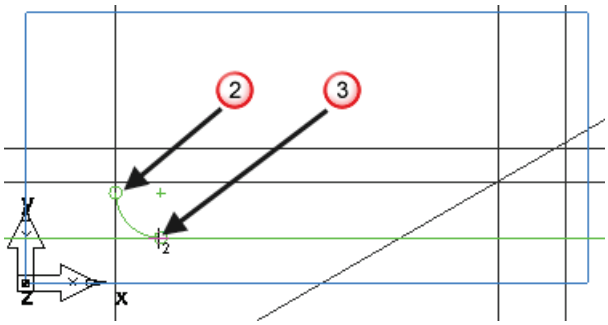

c Create the second arc:

In the **Feature/Geometry Edit** bar, enter a radius **R** of **1.0**, and click the horizontal line around point 4 and the through line around point 5.

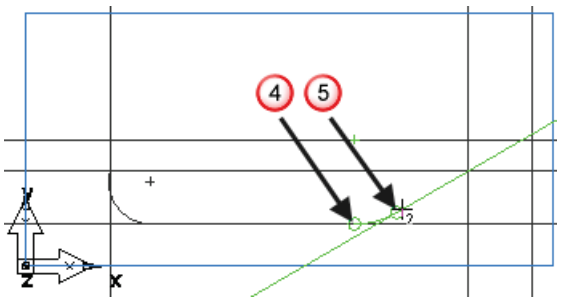

d Create the third arc by clicking the through line around point 6 and the horizontal line around point 7.

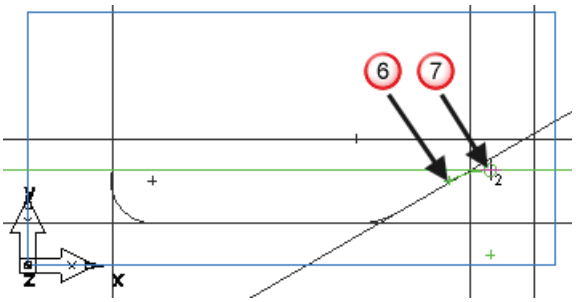

6 To mill the part you need to chain the curves.

a Select the **Curves**  step from the **Steps** panel.

b In the **Curves Creation** dialog, select the **Pick Curve Pieces**  button.

c Click at the intersection of the vertical and horizontal line at point 8 and at the intersection of the vertical and horizontal line at point 9.

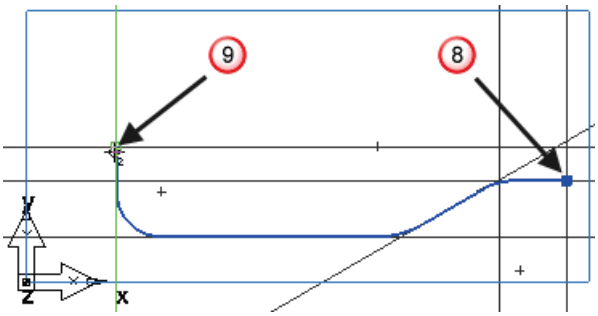

Creating the bottle surface

1 Select the **Surfaces**  step from the **Steps** panel.

2 In the **Surface** wizard, select **Surface of Revolution**, and click **Next**.

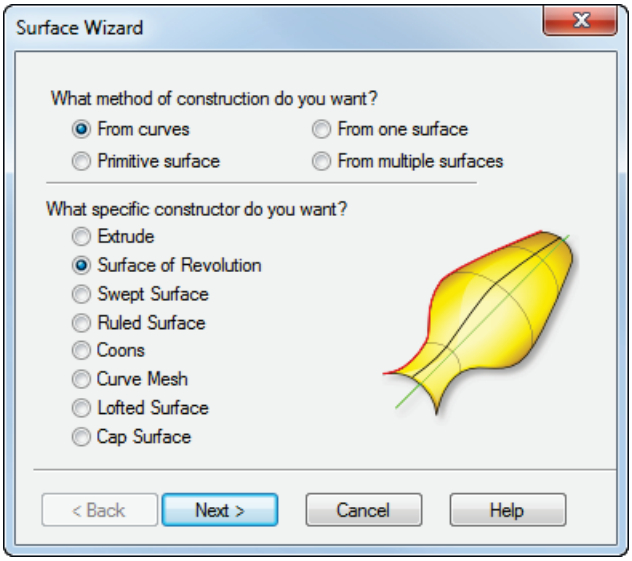

3 On the **Surface of Revolution** page:

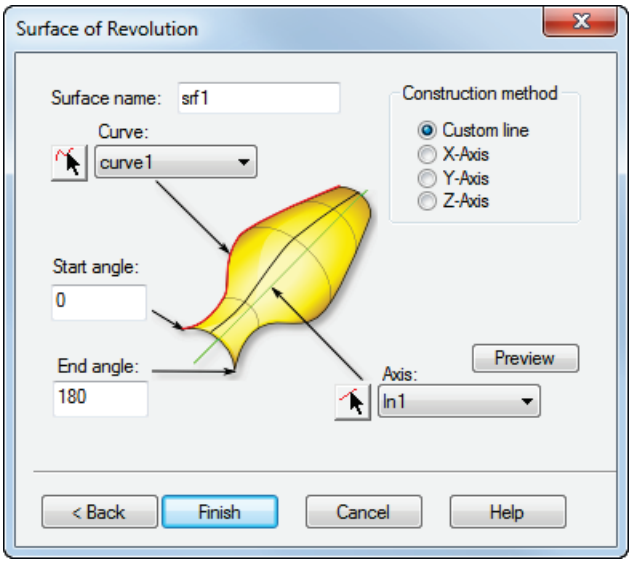

a Enter a **Start Angle** of **0**.

b Enter an **End Angle** of **180**.

c FeatureCAM automatically selects your chained curve in the **Curve** field.

d In the **Axis** field, click the **Pick line** button, and select the horizontal line around point 1.

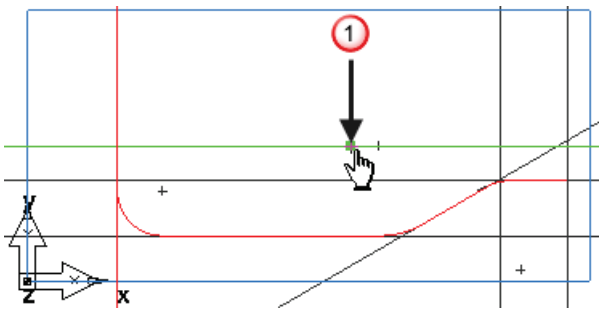

Click **Finish**.

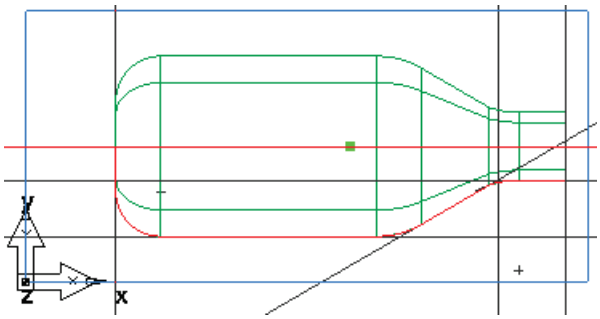

Viewing the part

1 To change the view to an isometric view, click the **Isometric** button on the **Standard** toolbar.

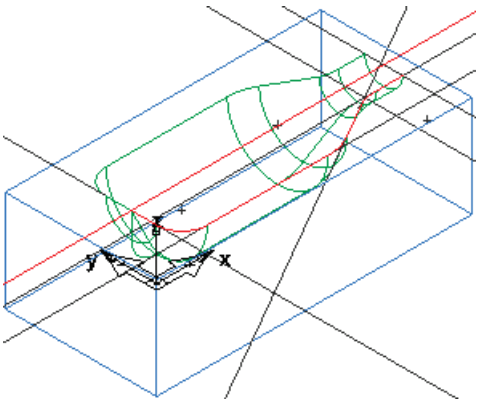

2 Control how the part is displayed using the **Viewing Options**.

a Select **Options > Viewing** from the menu. This displays the **Viewing Options** dialog.

b Select the **Show surface boundaries only** option, and click **Apply**.

This displays the surfaces as only their outer boundaries and trimmed loops. No additional lines are drawn in the interior of the surface. This makes the display of larger models much faster.

c Deselect the **Show surface boundaries only** option, and click **Apply**.

This displays the surfaces with lines in the interior of the surface. This aids visualization, but for large models, it makes the display of the part slower.

d Enter a **Surface fineness Wireframe** of **20**, and click **Apply**.

This displays the surfaces with more lines. Decreasing the value of **Surface Fineness** improves the display quality but slows down the graphics.

e Click **OK** to close the dialog.

3 From the **Hide** menu on the **Advanced** toolbar, click the **Hide All Geometry** button.

4 From the **Show** menu on the **Advanced** toolbar, click the **Show all surfaces** button.

5 Click the **Shade** button, on the **Standard** toolbar, to shade the part.

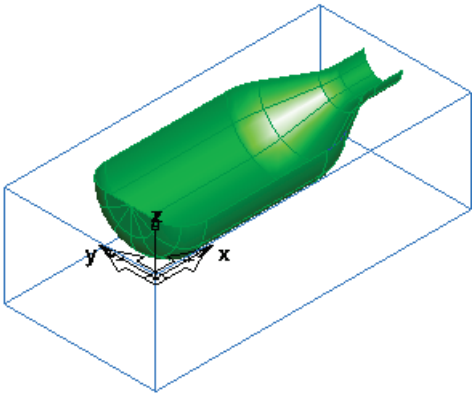

Creating a surface milling feature

This shows you how to create the surface features and select the toolpath strategies.

1 On the **Standard** toolbar, click the **Select** button, and select the surface (**srf1**). On selection it turns red.

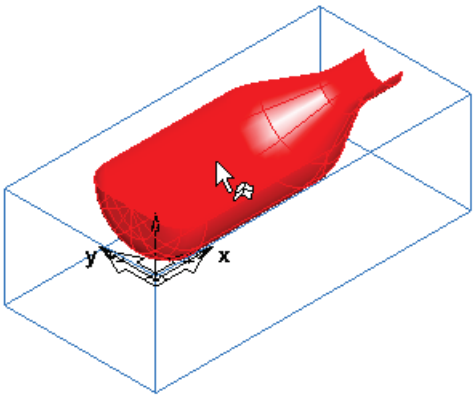

2 Select the **Features** step from the **Steps** panel.

3 In the **New Feature** wizard, in the **From Surface** frame, select the **Surface Milling** option, and click next.

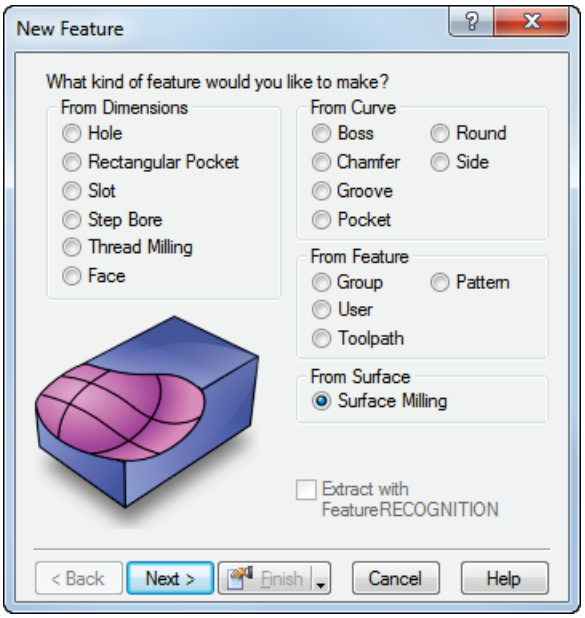

4 On the **Part Surface** page click **Next**.

5 On the **New Strategy** page, select the **Choose Rough, Semi Finish, and Finish...** option, and click **Next.**

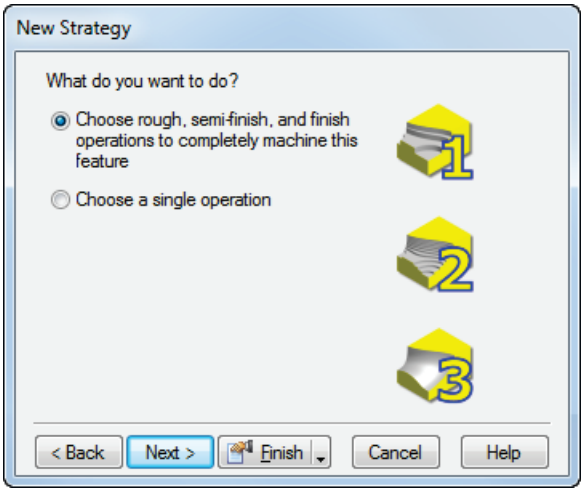

6 On the **Rough** page:

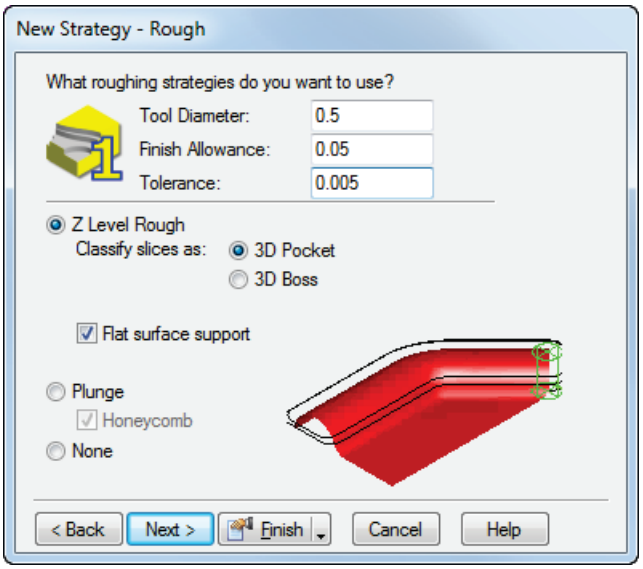

a Select the **Z Level Rough** option.

b Select **Classify slices as 3D Pocket.**

c Click **Next.**

7 On the **Semi-Finish** page, select **None**, and click **Next**.

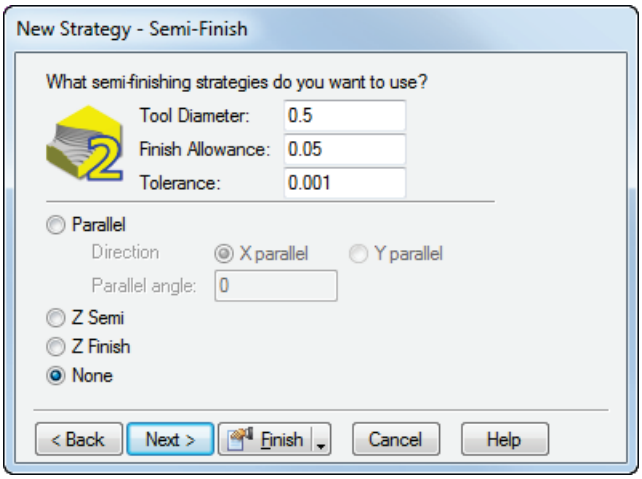

8 On the **Finish** page, select **Isoline**.

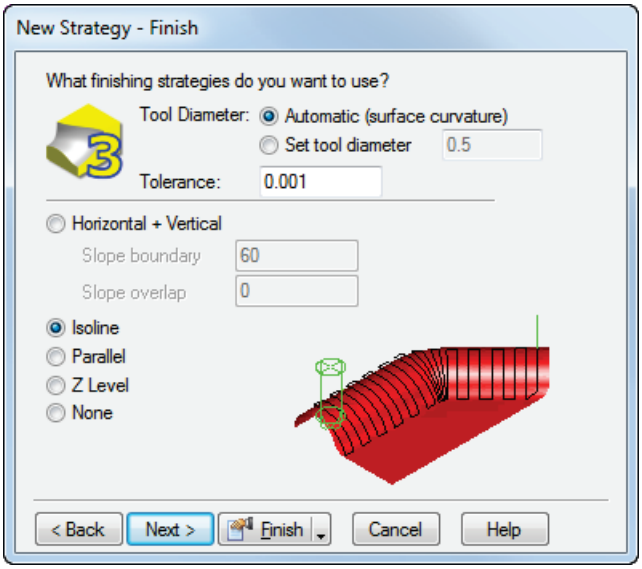

9 Click the **Finish** button.

Simulating the toolpaths

To view the simulated toolpath:

1. Click the **Toolpaths** step in the **Steps** panel. This displays the **Simulation** toolbar.
2. Click the **3D Simulation** button, and then click the **Play** button to start the simulation. If the **Automatic Ordering Options** dialog appears, click **OK** to close it. This accepts the default ordering options.

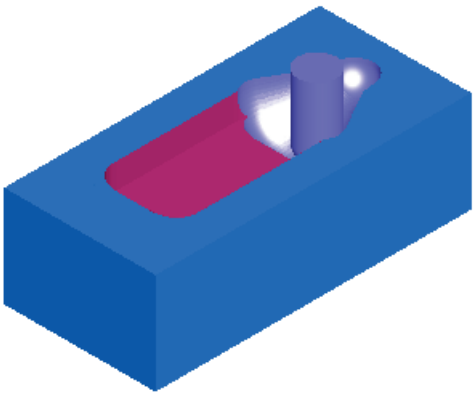

Note how the toolpaths are accurately simulated including the part rotations.

3. Click **Eject**. This removes the **Simulation** toolbar.

Introduction to wire EDM

This tutorial introduces you to the basics of creating wire EDM toolpaths. It looks at:

- Setting up your material and wire thickness.
- Creating wire EDM features.
- Specifying a wire EDM cutting strategy.
- Simulating wire EDM toolpaths.

*You must have licensed the **Wire EDM** option to run this tutorial.*

1. Start FeatureCAM (see page 2).
2. Create a new file (see page 4), but select a **Type** of **Wire EDM Setup**.
3. Defining the stock (see page 67).
4. Creating the profile (see page 68).
5. Creating a wire EDM feature (see page 70).
6. Simulating the wire EDM toolpath (see page 71).
7. Generating NC code (Wire EDM) (see page 73).
8. Adding a taper angle (see page 74).

Defining the stock

The preparatory steps define the stock and determine the coordinate system and view.

1 On the **Dimensions** page of the **Stock** wizard:

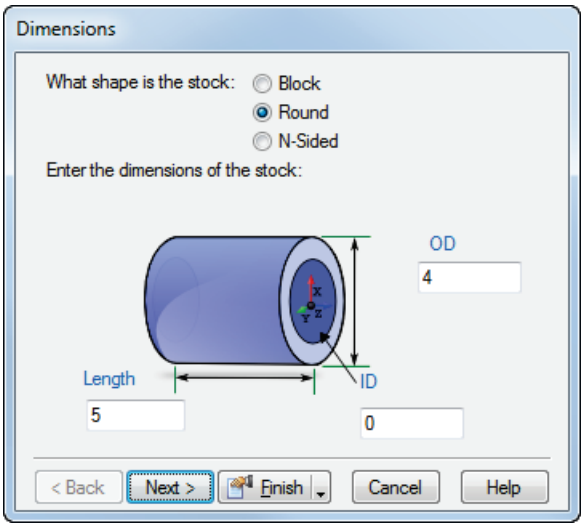

a Enter a **Thickness** of 0.5.

b Enter a **Width** of 4.

c Enter a **Length** of 4.

d From the **Finish** menu button select the **Finish** button.

Creating the profile

This step defines the profile.

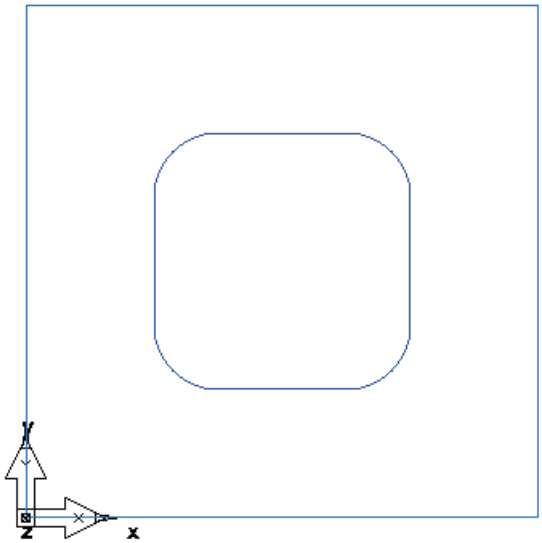

1 Select the **Curves**  step from the **Steps** panel.

2 In the **Curves Creation** dialog, select the **Curve Wizard**  button.

3 In the **Curve Wizard**:

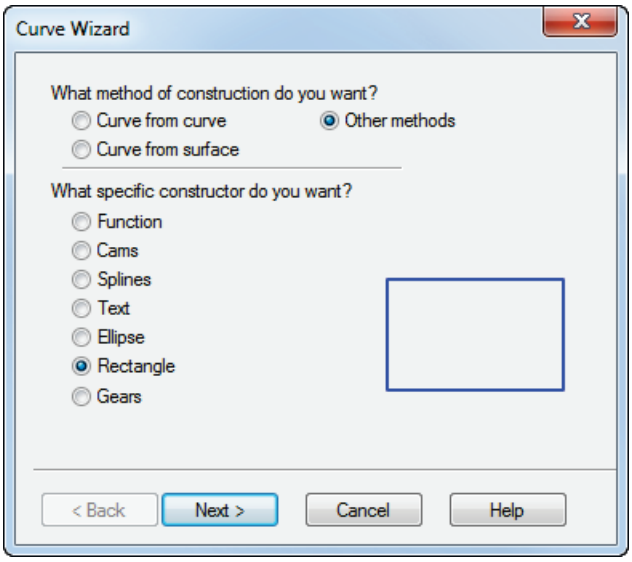

a Select a construction method of **Other methods**.

b Select a constructor of **Rectangle**.

c Click **Next**.

4 On the **Rectangle** page:

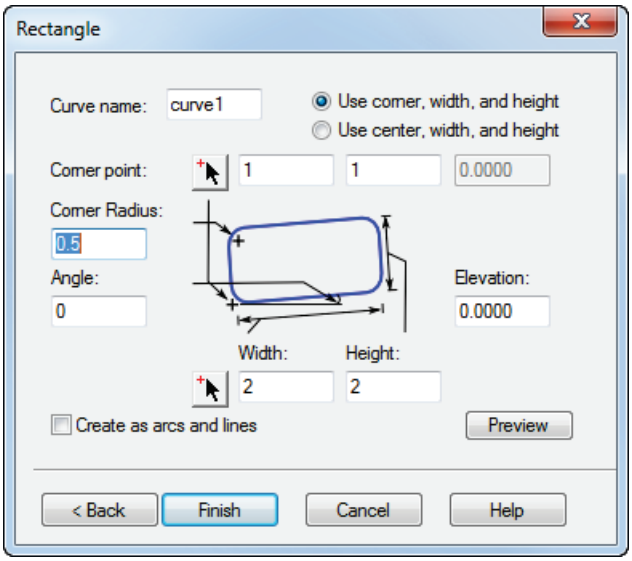

a Select **Use corner, width, and height**.

b Enter corner point of **1**, **1**, **0**.

c Enter a corner radius of **0.5**.

d Enter a **Width** of **2.0**.

e Enter a **Height** of **2.0**.

f Click **Finish**.

Creating a wire EDM feature

This shows you how to create a wire EDM feature.

1 Click the **Features**  step in the **Steps** panel.

2 In the **New Feature** wizard, select the **Die** option in the **2 Axis** frame, and click **Next**.

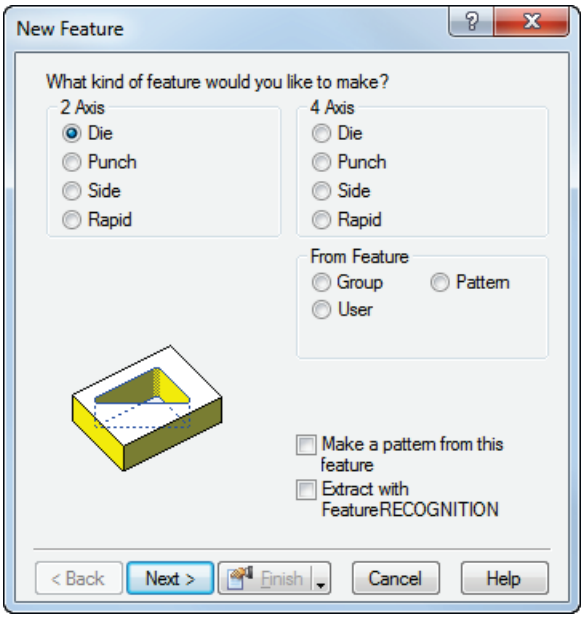

3 On the **Curves** page, click the **Pick curve or geometry** button, select the curve you created, and click **Next**.

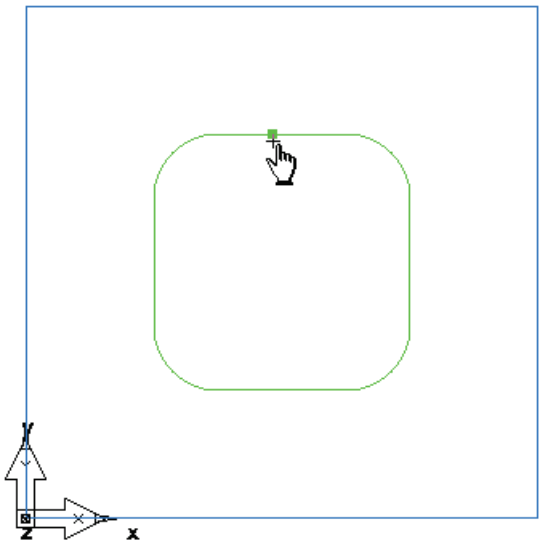

4 On the **Location** page, click **Next**.

5 On the **Dimensions** page, enter a **Thickness** of **0.5** and click **Next**.

6 On the **Start** page, click **Next**.

7 On the **Strategies** page:

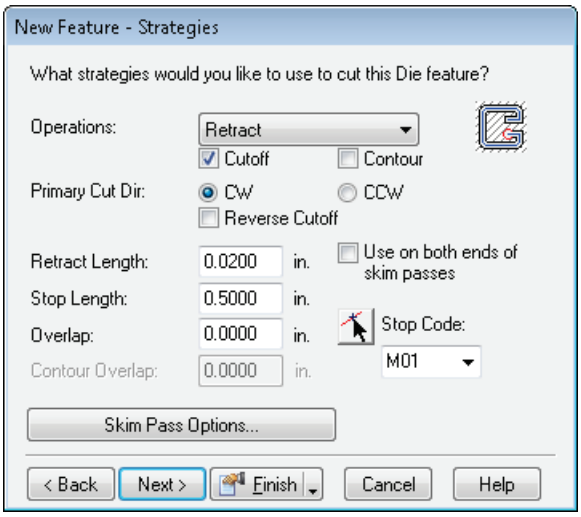

a In the **Operations** field select **Retract**.

b Select the **Cutoff** option.

c Select the **Contour** option.

d Click **Finish**.

Simulating the wire EDM toolpath

Now you have created the features, FeatureCAM automatically:

- Selects the most appropriate tools and operations;
- Recommends machining strategies;
- Calculates speeds and feeds;
- Generates toolpaths and creates the NC code.

To view the simulated toolpath:

1 Click the **Toolpaths**  step in the **Steps** panel. This displays the **Simulation** toolbar.

2 Click the **2D Simulation**  button on the **Simulation** toolbar.

3 Center the **Simulation Speed**  slider to specify the simulation rate.

4 From the **Simulation Next**  menu button, select the **Play to Next Operation**  button to see the retract operation. If the **Automatic Ordering Options** dialog appears, click **OK** to close it.

*To slow down the simulation, drag the **Simulation Speed** slider to the left.*

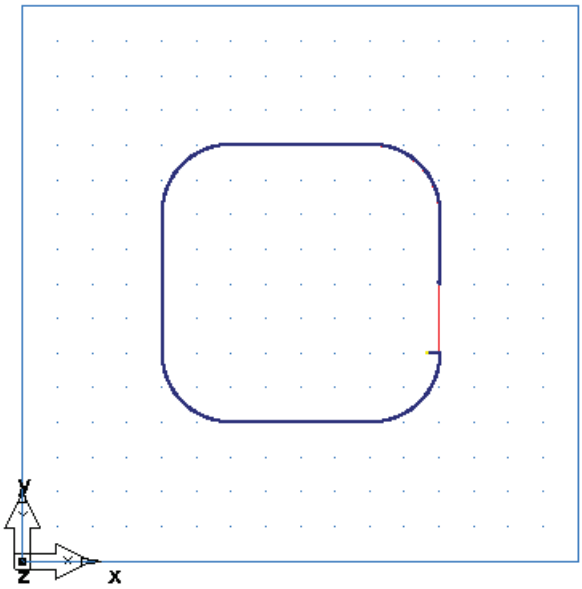

5 Click the **Play to Next Operation** button again to see the cutoff operation.

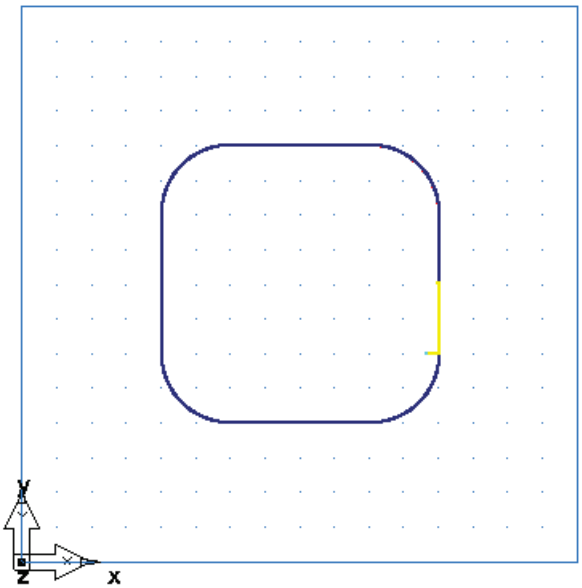

6 Click the **Play to Next Operation** button again to see the final contour operation.

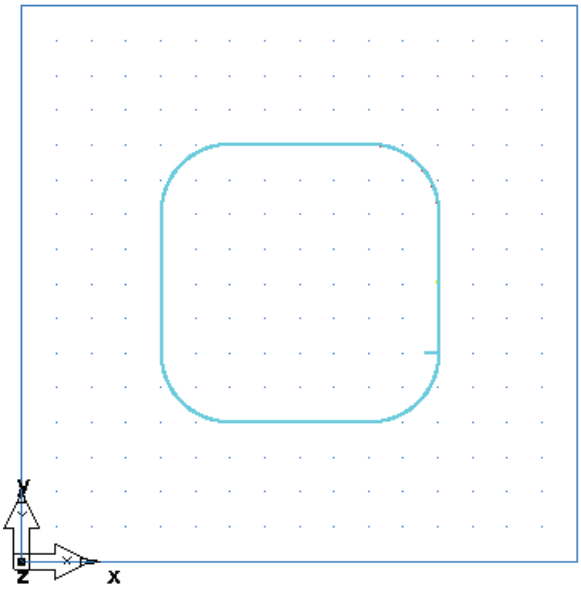

7 Click **Eject**.

Generating NC code

FeatureCAM generates the NC code to manufacture parts on a CNC machine. You can generate NC code after you have simulated the part, and therefore calculated the toolpaths.

1 Select the **NC Code** step from the **Steps** panel. This displays the **NC Code** dialog.

2 Click the **Display the NC Code** button to generate the NC code.

Adding a taper angle

This example shows you how to add a draft angle to a wire EDM part.

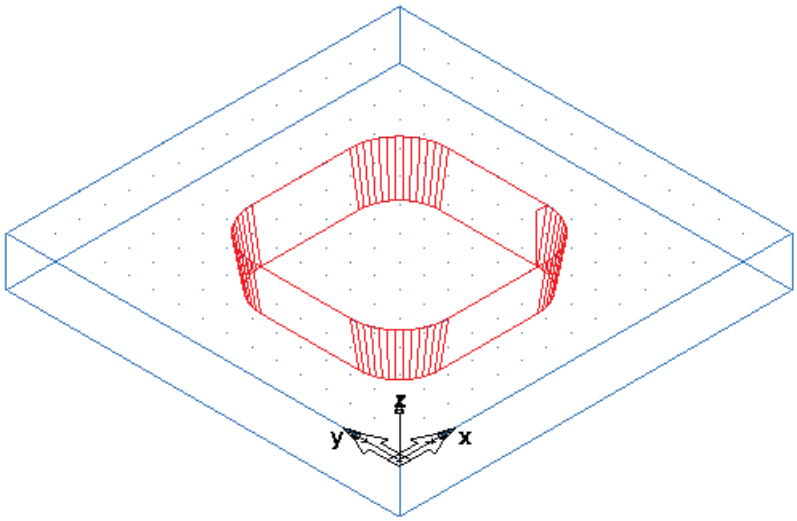

1 Open the **Part View** panel, select the **die1** feature from the **Setup1** node, and click the **Properties** button on the **Feature/Geometry Edit** toolbar.

2 In the **Properties** dialog for **die1**:

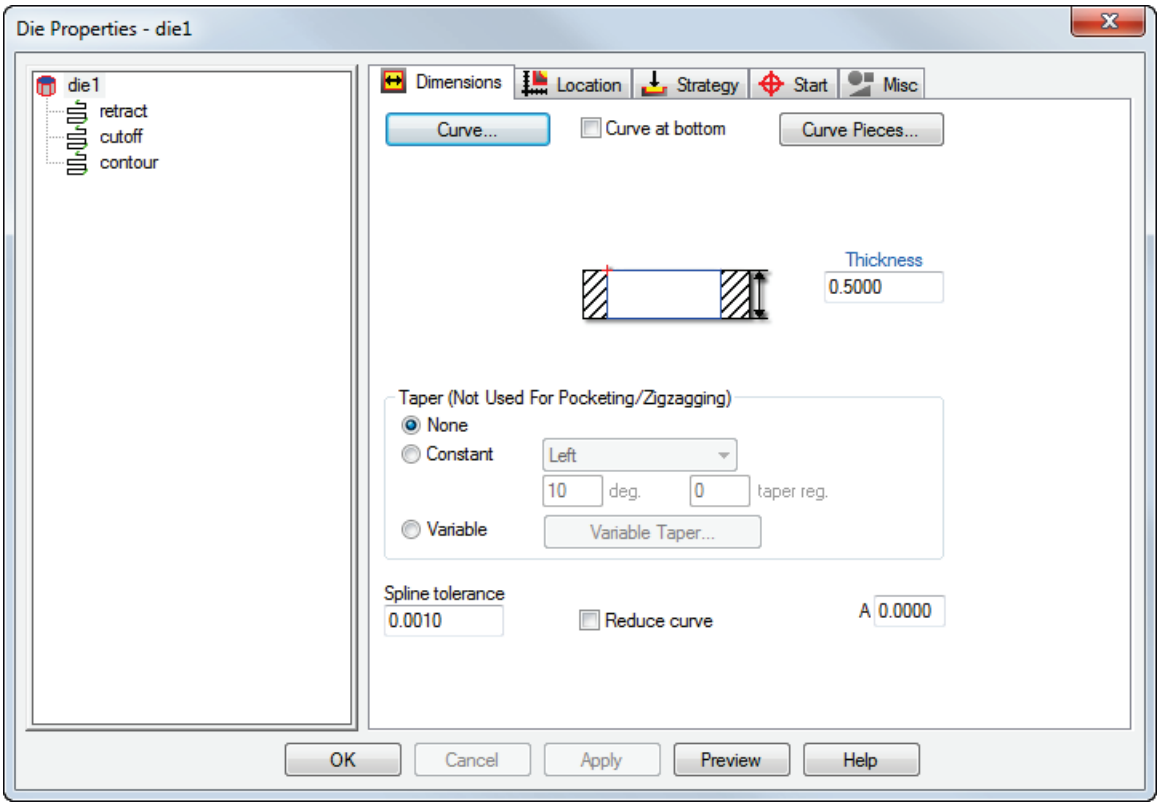

a Select **Constant**.

b Select a taper type of **Left**.

c Enter a **deg.** of 10 as the taper angle.

d Click **Apply**.

3 Click the **Hide Stock** button from the **Hide** menu on the **Advanced** toolbar.

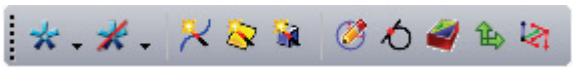

4 Click the **Isometric View** button on the **Standard** toolbar.

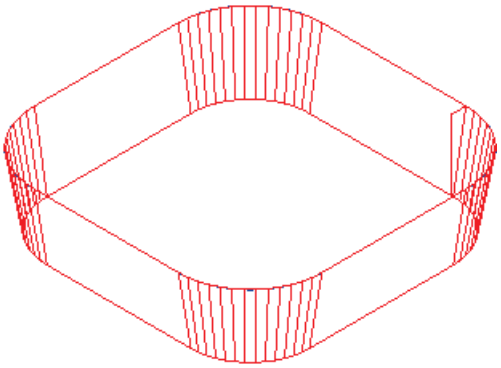

5 Return back to the **Properties** dialog, set the taper type to **Right**, and click **Apply**.

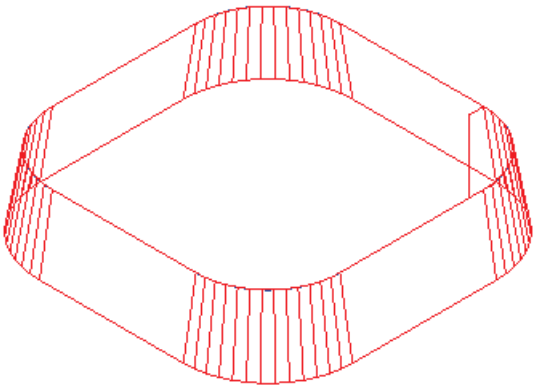

6 Change the taper type back to **Left**, and click **OK** to close the **Properties** dialog.

7 Select the **Toolpaths** step from the **Steps** panel.

8 Click the **3D Simulation** button, and then click the **Play** button.

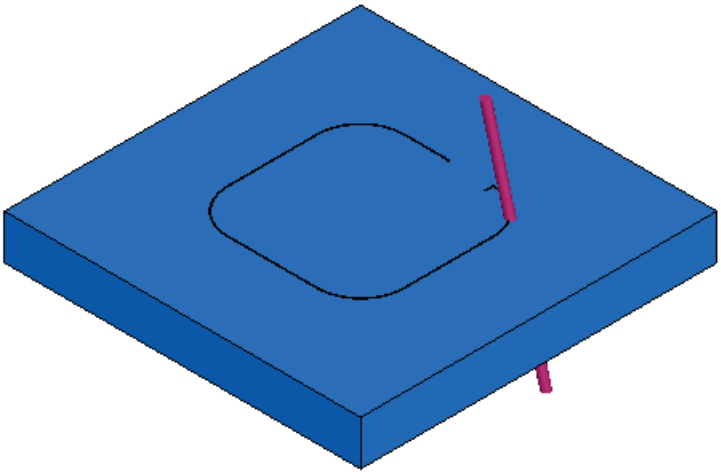

9 Click the **Select** button on the **Standard** toolbar.

10 Click inside the curve. FeatureCAM deletes that part of the stock.

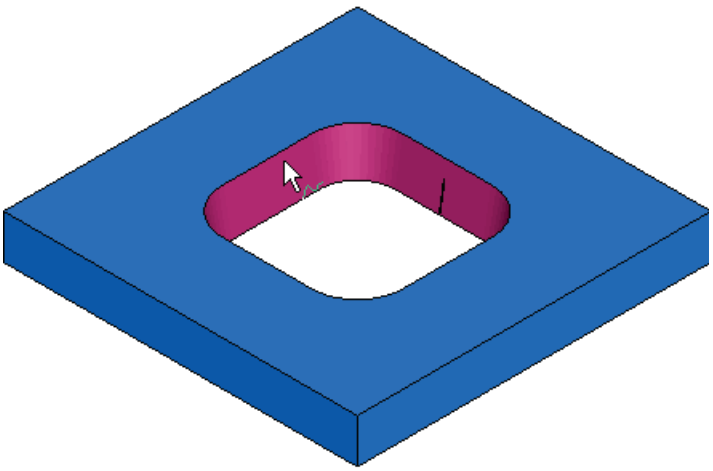

11 Click **Eject**.

12 From the **Show** menu on the **Advanced** toolbar, click the **Show Stock** button.

Index

2

2.5D milling • 8
2D turned profile • 30, 47, 48

3

3D milling • 55
3D toolpath simulation • 13, 37, 54, 66, 71

A

Arc • 56
Area clearance
  Roughing • 63
Assistance bar • 5
Automatic ordering • 16, 38

B

Bore feature • 30

C

Centre all • 26, 44
Chain curves • 27, 44, 56
Chamfer • 27
Checklist • 19
Context-sensistive help • 6
Controlling operations • 20
Controlling strategies • 20
Coordinate system • 26, 44
Curve • 27, 44, 50, 68
  Arc • 56
  Profile • 68
Cutoff feature • 30

D

Database • 2
  Material database • 2
  Tool database • 2
Display mode tololbar • 30
  2D turned profile • 30, 47, 48
Draft angle • 74
Duplicate holes • 49

E

Engraving • 50

F

Face feature • 30
Feature
  Bore feature • 30
  Cutoff feature • 30
  Duplicate holes • 49
  Engraving • 50
  Face feature • 30
  Groove feature • 30
  Hole feature • 9, 30, 49
  Pocket feature • 9
  Slot feature • 53
  Surface milling feature • 63
  Thread feature • 30
  Turn feature • 30, 47
  Wire EDM feature • 70

Feature/geometry edit bar • 5
Fillet • 44
Finishing • 63
Front view • 12

G

Geometry
  Hide all geometry • 61
  Show all surfaces • 61
Geometry creation • 27, 56
  Arc • 56
  Chain curves • 27, 44, 56
  Chamfer • 27
  Curve • 27, 44, 50, 68
  Draft angle • 74
  Engraving • 50
  Fillet • 44
  Line • 27, 44, 56
  Profile • 68
  Taper • 74
  Text • 50
Geometry edit bar • 5
Graphics window • 5
  Results window • 5, 15, 16, 18, 19, 38, 40
  Toolbox window • 5
Groove feature • 30

H

Help • 6
  Context-sensistive help • 6
  Help links • 6
  Online help • 6
  Technical support • 6
Help links • 6
Hide all geometry • 61
Hole feature • 9, 30, 49

I

Imperial tools • 2
Imperial units • 4
Inch tools • 2
Inch units • 4
Input modes • 26, 44
Isometric view • 12, 35, 48, 61

L

Line • 27, 44, 56

M

Machining operations • 15, 38
  Automatic ordering • 16, 38
  Controlling operations • 20
  Controlling strategies • 20
  Finishing • 63
  Manual ordering • 18
  Operation template • 38
  Ordering options • 16, 38
  Results window • 5, 15, 16, 18, 19, 38, 40
  Roughing • 63
  Semi-finishing • 63
Manual ordering • 18
Manufacturing
  NC code • 21, 41, 73
  Post processor • 22
Manufacturing operations • 15, 38
  Automatic ordering • 16, 38
  Controlling operations • 20
  Controlling strategies • 20
  Finishing • 63
  Manual ordering • 18
  Operation template • 38
  Ordering options • 16, 38
  Results window • 5, 15, 16, 18, 19, 38, 40
  Roughing • 63
  Semi-finishing • 63
Material database • 2
Menu bar • 5
Metric tools • 2
Metric units • 4
Mill/turn • 43
Milling
  2.5D milling • 8
  3D milling • 55
  Surface milling feature • 63
Milling setup • 4

N

NC code • 21, 41, 73
  Saving NC code • 23

Tool mapping • 22

O

Online help • 6
Opening a part • 4
Operation template • 38
Operations • 15, 38
Automatic ordering • 16, 38
Controlling operations • 20
Controlling strategies • 20
Manual ordering • 18
Operation template • 38
Ordering options • 16, 38
Operations list • 19
Operator's checklist • 19
Ordering of operations • 15, 38
Automatic ordering • 16, 38
Controlling operations • 20
Controlling strategies • 20
Manual ordering • 18
Operation template • 38
Ordering options • 16, 38
Ordering options • 16, 38

P

Part
Opening a part • 4
Part documentation • 19, 40
Pocket feature • 9
Post processor • 22
Profile • 68

R

Results window • 5, 15, 16, 18, 19, 38, 40
Roughing • 63

S

Saving NC code • 23
Screen layout • 5
Semi-finishing • 63
Setup
Imperial units • 4
Inch units • 4
Metric units • 4
Milling setup • 4
Shading • 35, 48, 61
Show all surfaces • 61
Simulating toolpaths • 13, 37, 54, 66, 71
3D toolpath simulation • 13, 37, 54, 66, 71
Slot feature • 53
Starting FeatureCAM • 2
Status bar • 5
Stock • 8, 24, 44, 56, 67
Strategy
Automatic ordering • 16, 38
Controlling strategies • 20
Manual ordering • 18
Ordering of operations • 15, 38
Ordering options • 16, 38
Surface creation • 60
Surface of revolution • 60
Surface milling feature • 63
Surface of revolution • 60

T

Taper • 74
Technical support • 6
Template
Operation template • 38
Text • 50
Thread feature • 30
Title bar • 5
Tool database • 2
Imperial tools • 2
Inch tools • 2
Metric tools • 2
Tool mapping • 22
Toolbars • 5
Assistance bar • 5
Display mode tololbar • 30
Feature/geometry edit bar • 5
Geometry edit bar • 5
Menu bar • 5
Status bar • 5
Title bar • 5
Toolbox window • 5
Toolpath
Simulating toolpaths • 13, 37, 54, 66, 71
Tools
Imperial tools • 2

Inch tools • 2
Metric tools • 2
Tool database • 2
Tool mapping • 22
Tools list • 19
Turn feature • 30, 47
Turn/mill • 43
Turning • 24

U

Units
Imperial tools • 2
Imperial units • 4
Inch tools • 2
Inch units • 4
Metric tools • 2
Metric units • 4

V

Viewing the part • 12, 35, 48, 61
Hide all geometry • 61
Shading • 35, 48, 61
Show all surfaces • 61
Views
2D turned profile • 30, 47, 48
Centre all • 26, 44
Front view • 12
Isometric view • 12, 35, 48, 61
Viewing the part • 12, 35, 48, 61

W

Window
Graphics window • 5
Results window • 5, 15, 16, 18, 19, 38, 40
Toolbox window • 5
Wire EDM • 67
Wire EDM feature • 70

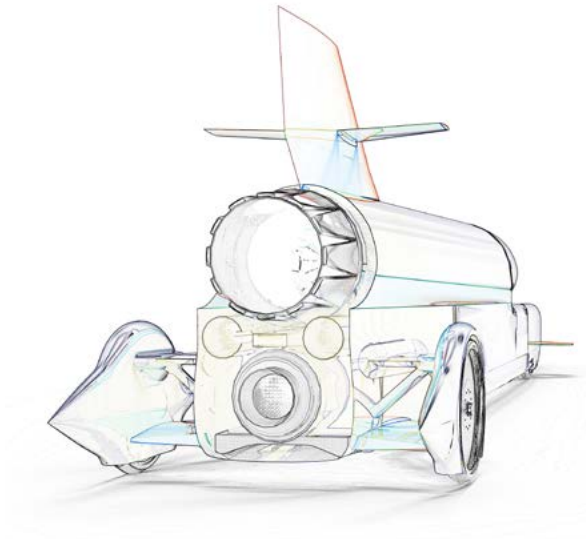

FeatureCAM 2015 R3

Feature-based CAM software for mills, multi-tasking lathes and wire EDM

www.featurecam.com

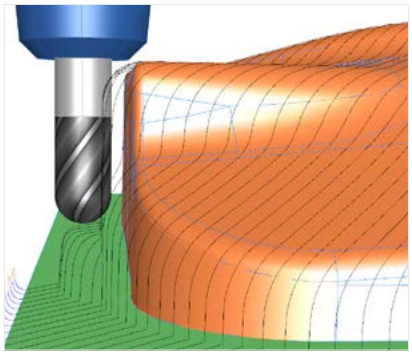

FeatureCAM 2015

www.featuecam.com

www.delcam.tv

Unlock the power of Delcam software

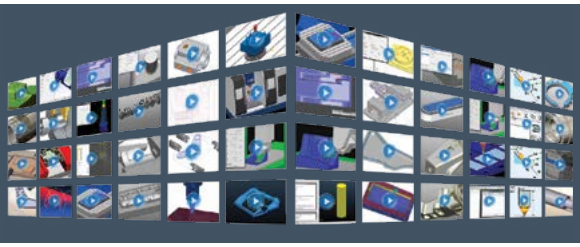

LEARNING ZONE

Visit **www.delcam.tv/lz** and see how Delcam software could benefit your business!

Delcam Advanced Manufacturing Solutions

Powering your productivity

Delcam
Small Heath Business Park, Birmingham, B10 0HJ, United Kingdom
T: +44 (0) 121 766 5544 | E: marketing@delcam.com | W: www.delcam.com

To contact your local reseller, visit **www.delcam.com/resellers**

AUTODESK.